E6580496 ①

# TOSHIBA

## ULTRA-COMPACT DIGITAL INVERTER

# VF-SX

## OPERATION MANUAL

JUNE, 1993

# TOSHIBA VF-SX INVERTER OPERATION MANUAL

## TABLE OF CONTENTS


INTRODUCTION . . . . . I-1

CHAPTER 1 Inspection Procedure Upon Receipt . . . . . 1-1

CHAPTER 2 Proper Environment for Installation . . . . . 2-1

CHAPTER 3 External Views and Connection Diagrams . . . . . 3-1
3.1 External Views . . . . . 3-2
3.2 Connection Diagrams . . . . . 3-4

CHAPTER 4 Application Precautions . . . . . 4-1

CHAPTER 5 Wiring Guidelines and Warnings . . . . . 5-1
5.1 Inverter Wiring . . . . . 5-2
5.2 Installation of a Molded Case Circuit Breaker (MCCB) . . . . . 5-4
5.3 Installation of a Primary Magnetic Contactor (MC) . . . . . 5-5
5.4 Installation of an Output Magnetic Contactor (MC) . . . . . 5-5
5.5 Installation of an External Overload Relay . . . . . 5-6
5.6 Installation of an Input Reactor . . . . . 5-6
5.7 Incorrect Wiring and Incorrect External Components . . . . . 5-6
5.8 Basic Wiring Recommendations . . . . . 5-7

Chapter 6 Standard Connections . . . . . 6-1
6.1 Examples of Standard Wiring . . . . . 6-2
6.2 Terminal Functions . . . . . 6-7

Chapter 7 Parameter Groups . . . . . 7-1
7.1 Definitions of SX Drive Group Parameters . . . . . 7-2
7.2 Parameter Group Tables . . . . . 7-3

Chapter 8 Basic Operation Theory . . . . . 8-1
8.1 Operation of the Touchpad Control Panel . . . . . 8-2
8.2 Display Modes . . . . . 8-4
8.2.1 Drive Mode . . . . . 8-5
8.2.2 Monitor Mode . . . . . 8-8
8.2.3 Programming Mode . . . . . 8-10
8.2.4 Jogging Mode from the Touchpad . . . . . 8-11
8.3 PANEL/REMOTE Control . . . . . 8-12
8.4 Selection of Stopping Method from the Touchpad . . . . . 8-12
8.5 Starting the Drive from the Touchpad . . . . . 8-14
8.6 Changing Frequency from the Touchpad . . . . . 8-16
8.7 Error Reset . . . . . 8-17
8.8 Warning Displays . . . . . 8-18
8.9 Fault Relay Information . . . . . 8-19

CHAPTER 9 Fundamental Operation Parameters and Functions [Gr.F] . 9-1
9.1 Setting of Voltage and Frequency Characteristics . . . . . 9-4
9.1.1 Maximum Frequency [FH] . . . . . 9-4
9.1.2 Base Frequency [UL] . . . . . 9-5
9.1.3 Torque Boost [Ub] . . . . . 9-7
9.1.4 V/f Patterns [Pt] . . . . . 9-8
9.2 Upper Limit Frequency and Lower Limit Frequency [UL, LL] 9-9
9.3 Forward and Reverse Run [F, r] . . . . . 9-10
9.3.1 Operation from the Touchpad . . . . . 9-10
9.3.2 Operation Using External Signals . . . . . 9-11
9.4 Acceleration and Deceleration . . . . . 9-14
9.4.1 Acceleration and Deceleration Time [ACC1], [dEC1], [ACC2], [dEC2] . . . . . 9-14
9.4.2 Acceleration/Deceleration Pattern [Pt1], [Pt2] . . 9-15
9.4.3 Selection of Acceleration/Deceleration 1 and 2 [Ad2], [Ad2F] . . . . . 9-17
9.5 Setting of Standard Parameter Groups [tYP] . . . . . 9-19

Chapter 10 Terminal Selection Parameters [Gr.St] . . . . . 10-1
10.1 Command Mode Selection [CMOd] . . . . . 10-2
10.2 Frequency Setting Commands [FMOd] . . . . . 10-3
10.3 Parameter Setting Disable Function [PMOd] . . . . . 10-3
10.3.1 Security Considerations and Parameter [PMOd] . . . . 10-4
10.4 Input Terminal Selection [Itb] . . . . . 10-4
10.5 Output Terminal Selection [Otb] . . . . . 10-6
10.6 Low Speed Signal Output and Speed Reached Signal Output [LF], [LFHL], [FrCH], [rCH], [rrCH] . 10-7
10.6.1 Low Speed Signal Output Frequency [LF] and Speed Reached Logic Signal [LFHL] . . . . . 10-7
10.6.2 Speed Reached Signal Output [rCH] . . . . . 10-7
10.7 Frequency Setting via Remote Control Signals . . . . . 10-9
10.7.1 Types of Frequency Setting Signals . . . . . 10-10
10.7.2 RR Terminal Input Priority [rrCC], [IUIn] . . 10-12
10.8 Frequency Setting Signals [PI], [F-PI] and [P2], [F-P2] . . . . . 10-12
10.9 Jogging Run via Remote Control [JOG], [JStP] . . 10-14
10.10 Multiple Speed Run [Sr.n], [Sr1 -- Sr7] . . 10-17

Chapter 11 Protection Parameters [Gr.Pr] . . . . . 11-1
11.1 Regenerative Discharge Braking Selection [Pb] and Overvoltage Limiting Action Selection [OPSS] . . . . . 11-2
11.2 DC Injection Braking Start-up Frequency [dbF], DC Injection Braking Voltage [dbU], and DC Injection Braking Time [dbt] . . . . . 11-4
11.3 Emergency Stop [ESTP] . . . . . 11-6
11.3.1 Emergency Stop from the Touchpad . . . . . 11-6
11.3.2 Emergency Stop Using Remote Control Signals . . . . . 11-7
11.3.3 Emergency DC Injection Braking Stop Control Time [Edbt] . . . . . 11-8
11.4 Retry [rtry] . . . . . 11-8
11.5 Power Control Function [UUC] . . . . . 11-10
11.6 Electronic Thermal Protective Level [tHr] . . . . . 11-11
11.7 Stall Prevention Function Activation Level [StL] . . . 11-11
11.8 Electronic Thermal Protection Characteristic Selection [OLn] . . . . . 11-11
11.9 Retention of Trip [trCL] . . . . . 11-11

Chapter 12 Control and Communication Parameters [Gr.CC] . . . . . 12-1
12.1 Differences Between Startup Frequency and Operation Starting Frequency . . . . . 12-2
12.2.1 Start-Up Frequency [F-St] . . . . . 12-3
12.2.2 Operation Starting Frequency [Frun] . . . . . 12-4
12.2.3 Operation Starting Frequency Hysteresis [FHYS] . . . 12-4
12.3 Jump Frequency and Jump Bandwidths [FJ.n], [FJ1] and [bFJ1], [FJ2] and [bFJ2], [FJ3] and [bFJ3] . . . . . 12-5
12.4 PWM Carrier Frequency [CF] and Motor Tone Selection [CFS] . . . . . 12-6
12.5 Output Voltage Adjustment [POUt] and Power Voltage Compensation Function [PAdJ] . . . . . 12-6
12.6 Automatic Torque Boost [AUb] . . . . . 12-8
12.7 Slip Frequency Compensation [SFC] . . . . . 12-10

Chapter 13 Meter Adjustment Parameters [Gr.AM] . . . . . 13-1
13.1 Meter Connections [FMAM] . . . . . 13-2
13.1.1 Connection of a Frequency Meter [FM] . . . . . 13-2
13.1.2 Connection of an Ammeter [AM] . . . . . 13-3
13.2 Frequency Setting Signal [rr-b], [rr-G] . . . . . 13-5
13.3 Universal Unit Multiplication Factor [dSP2] . . . . . 13-7

Chapter 14 General Drive Specifications . . . . . 14-1
14.1 Drive Specifications . . . . . 14-2
14.2 External Dimensions . . . . . 14-4

Chapter 15 Options . . . . . 15-1
15.1 Input Reactor . . . . . 15-2
15.2 Radio Noise Reduction Filter . . . . . 15-2
15.3 Braking Resistor . . . . . 15-2
15.4 Connection Cable . . . . . 15-2

Chapter 16 Error Displays, Explanations, and Remedies . . . . . 16-1
16.1 Inverter Trip Causes and Remedies . . . . . 16-2
16.2 Other Errors and Remedies . . . . . 16-4

Chapter 17 Maintenance and Inspection . . . . . 17-1

Chapter 18 Storage and Warranty . . . . . 18-1
18.1 Storage . . . . . 18-2
18.2 Warranty . . . . . 18-2

Appendix . . . . . A-1
APPENDIX 1 -- TABLE OF TRIP CODES AND WARNING CODES . . . . . A-2
APPENDIX 2 -- INPUT TERMINAL INFORMATION AND OUTPUT TERMINAL INFORMATION . . . . . A-3
APPENDIX 3 -- LED ALPHANUMERIC CROSS REFERENCE . . . . . A-4

# INTRODUCTION

Thank you for purchasing the Toshiba Compact Inverter "TOSVERT VF-SX".

The VF-SX variable speed drive is a high performance inverter that has numerous built-in functions, making it suitable for many applications. This inverter is very easy to program and operate. All instructions are entered via the membrane keyboard panel (the "touchpad"). The latest technology and features, including current limit, auto-restart, dynamic braking, and stall prevention are included. This product offers flexible operation for numerous applications, and helps prevent nuisance tripping, even for difficult loads and applications.

Please thoroughly review this manual before attempting use of the VF-SX drive, so that the features of this drive can be properly applied for each unique application.

Please keep this manual for future reference, operation, and maintenance of the VF-SX drive.

Always ground the inverter in accordance with Article 250 of the National Electrical Code or Section 10 of the Canadian Electrical Code, Part I. The grounding conductor should be sized in accordance with NEC Table 250-95 or CEC, Part I, Table 16.

See Chapter 6 for simplified power and control wiring instructions and recommendations.

# CHAPTER 1 Inspection Procedure Upon Receipt

1. Inspect the Toshiba Model VF-SX variable speed drive. Confirm that no parts have been damaged during transit.

2. Confirm that the model number inscribed on the nameplate is the same as that ordered.

3. If the inverter will not be placed in service immediately upon receipt, store the device in a dust free environment. Be sure the room is ventilated with cool, dry air. Store this device in its original packing material whenever possible.

4. Every reasonable precaution is taken during the production, packaging, and shipping of this device to prevent damage to the unit before installation. If there is any damage upon receipt, contact the dealer and the freight company immediately.

# CHAPTER 2 Proper Environment for Installation

The VF-SX inverter is a solid state device. Use caution to install the device in the proper environment, as instructed in the general recommendations shown below. See Chapter 14 for detailed specifications of the proper operating environment.

1. Confirm that the input power supply is within +/- 10% of the nominal voltage. The protective circuit will activate and trip if the permissible input voltage range is exceeded. Extreme voltage conditions may damage the inverter.

2. Do not install the inverter in places where high temperature or humidity are present. Do not install in dusty environments, or environments contaminated with metal particles or metallic powder.

3. Do not mount the inverter on any device subject to intense vibration.

4. Operate the inverter only in an environment between -10 deg C to 40 deg C. The inverter generates heat when operating. When it is installed on a subpanel or backplate be sure there is adequate ventilation on all sides of the inverter, including the back of the inverter where the heat sinks are located. In high ambient temperatures it may be necessary to remove the stick-on seal on the top of the inverter to allow more ventilation through the inverter.

5. Certain electrical equipment, if installed too near the inverter, may cause malfunctions. Examples of this type of equipment can include:

   A. If a magnetic contactor is installed near the inverter install a urge suppression device across the coil of the contactor to prevent surging magnetic fields from interfering with the operation of the inverter.
   B. Do not install the inverter near fluorescent lighting.
   C. Keep other heat generating electrical equipment, such as resistors or heaters, away from the inverter.

6. Always properly ground the inverter chassis to prevent electrical noise and nuisance tripping. Proper earth ground should not exceed 100 ohms.

7. Install the inverter ONLY on incombustible subpanels, such as a metal subpanel. If the inverter is installed on a heat insulating subpanel then mount the inverter on a metal subpanel first, and attach this assembly to the insulated subpanel.

8. Always have at least 10 centimeters free space above and below the inverter. Always have at least 5 centimeters free space on EACH side of the inverter. If more than one inverter is mounted in a row, leave at least 10 centimeters between each drive, from side to side. If fans are installed in the enclosure or near the drives this space requirement may be reduced. Consult the Toshiba factory for details.

# CHAPTER 3 External Views and Connection Diagrams

# 3.1 External Views

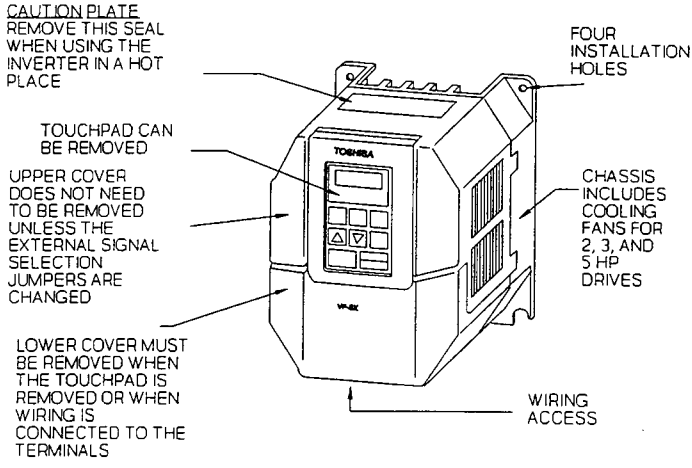


HOW TO REMOVE THE LOWER COVER

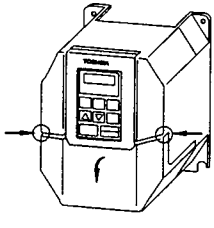

PRESS THE LOWER COVER ON BOTH SIDES (AS SHOWN) SIMULTANEOUSLY. PULL THE COVER FORWARD. TO INSTALL THE COVER, INSERT THE COVER CLASPS IN THE BOTTOM HOLES, ROTATE THE TOP OF THE LOWER COVER BACK INTO POSTITION, AND GENTLY PRESS UPPER CLASPS INTO PLACE.

(VIEW IS WITH THE TOUCHPAD AND LOWER COVER REMOVED)

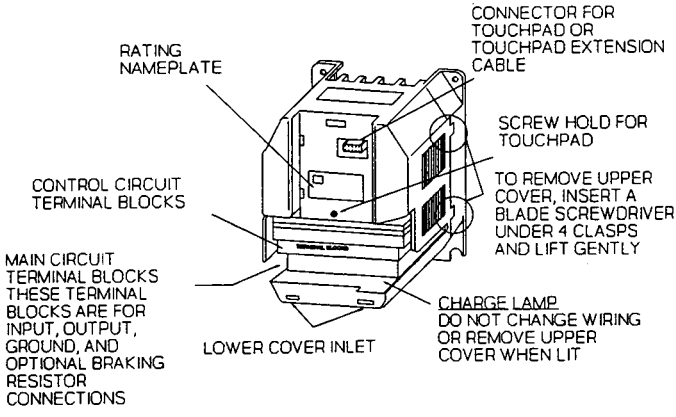


HOW TO REMOVE THE TOUCHPAD

1. REMOVE THE LOWER COVER

2. TURN THE SCREW AT THE BOTTOM OF THE PANEL COMPLETELY TO THE RIGHT UNTIL IT IS LOOSE.

3. PULL UP GENTLY ON THE TOUCHPAD AND LIFT IT OFF THE MAIN BODY OF THE DRIVE.

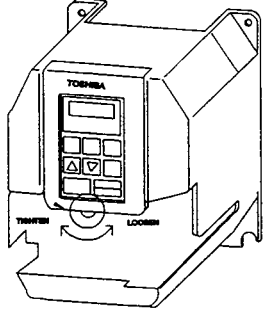

# SINGLE PHASE

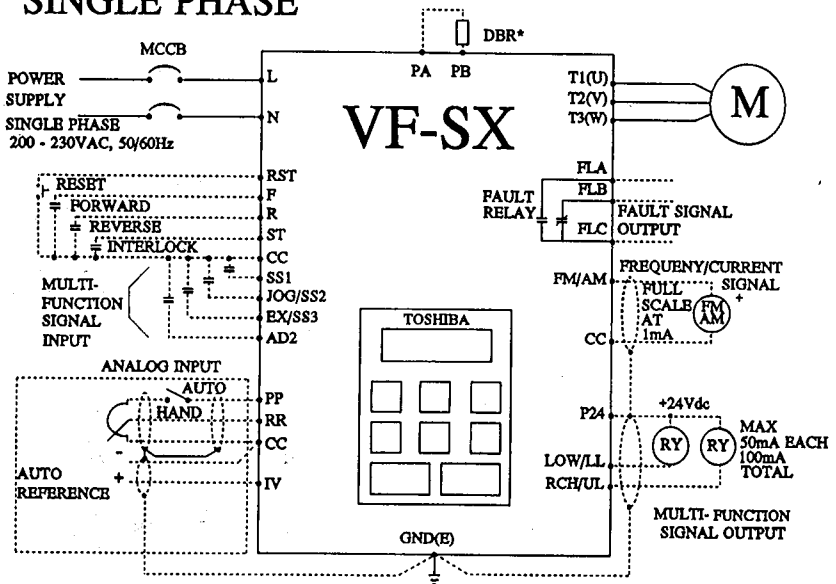


*DBR NOT AVAILABLE ON SINGLE PHASE 1/8, 1/4HP UNITS.

# THREE PHASE

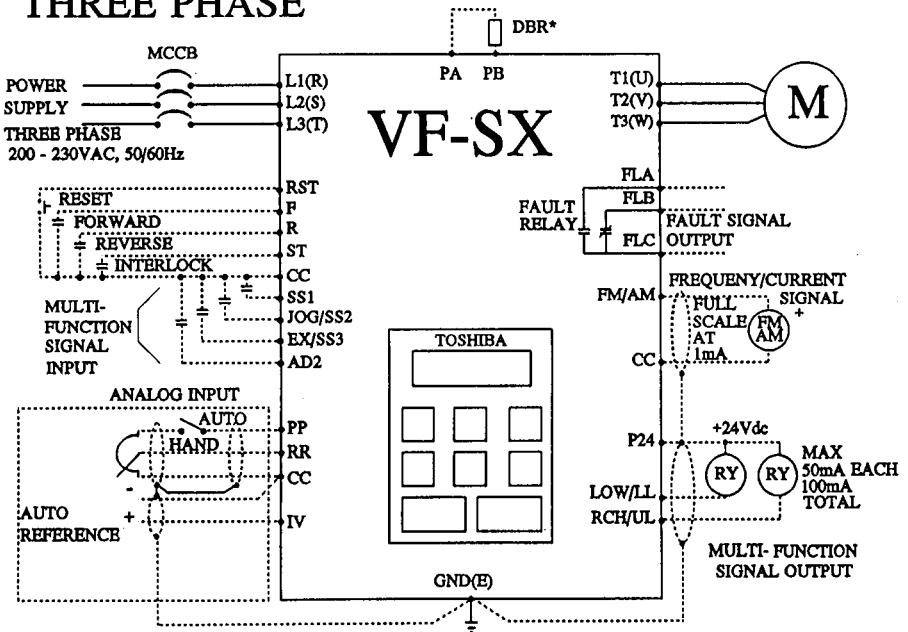


*DBR NOT AVAILABLE ON THREE PHASE 1/8, 1/4HP UNITS.

# CHAPTER 4 Application Precautions

1. If the drive is very lightly loaded (approximately 5%) or if the inertia of the driven load is very small, the drive may become unstable. The result could be abnormal vibration or overcurrent trip. If this condition persists lower the PWM carrier frequency (parameter [CF]). See Chapter 12 for instructions.

2. Unstable results may occur if:

   A. The output rating of the drive is less than the output rating of the motor.
   B. The drive is used with a motor with special ratings, such as an explosion proof motor, or a motor specially built for high inertia applications.
   C. The drive is used with a pulsing load, such as a load requiring repeated piston type operation.

3. The motor will coast to stop if the power is lost. If an immediate stop or very quick deceleration of the motor is required use an auxiliary brake device. Select the appropriate stopping method as described in Chapter 11 for an emergency stop.

4. GROUNDING

   The inverter should be grounded in accordance with Article 250 of the National Electrical Code or Section 10 of the Canadian Electrical Code, Part I. The grounding conductor should be sized in accordance with NEC Table 250-95 or CEC, Part I, Table 16.

# CHAPTER 5 Wiring Guidelines and Precautions

This chapter of the manual discusses some of the basic wiring configurations and external devices commonly associated with the installation and application of variable speed drives. Local codes, specifications, requirements, and operating conditions may require the addition of other devices or modifications to the following basic recommendations.

## 5.1 Inverter Wiring

(Refer to Figure 5.1 and 5.2)

1. It can be difficult to remove the upper cover after wiring, so change the jumper selectors J1 or J2 on the internal PC board for "external signal selection" before wiring the inverter. See Chapter 6 for the approximate location of jumpers J1 and J2 inside the drive.

   When a signal between 0 to 5V is used as frequency signal, switching the jumper is necessary. Refer to Chapter 10, Table 10-9 for details.

2. Always turn the main line power OFF and confirm that there is no voltage present with a testing tool before connecting power, motor leads, or control wires.

3. WARNING: Wait until the "CHARGE" lamp has turned off before working on the drive. An internal capacitor stores electrical charge in the inverter and electrocution may result due to inadvertent contact with this capacitor. Do not touch the terminals or remove the cover while the "CHARGE" lamp is on. This indicator is located in the lower right-hand side of the drive near the terminal blocks, and it is a brightly lit red LED when the drive is fully charged.

4. WARNING: Do not wire input power to the output terminals (U, V, W) of the drive. This will damage the drive. Before energizing, confirm that motor leads are attached to terminals U, V, and W and that the main power leads are attached to terminals R, S, and T.

5. Exercise caution when wiring the control signals, as shown.

   A. Install a surge suppressor on any electromagnetic coil on any contactor wired to the drive. This includes line and load side contactors.
   B. Use shielded wire or twisted pair wire for control circuit wiring. Keep this wire isolated from power wire.
   C. Always isolate the input control signals from the main power wiring. This restriction applies to all control terminals except FLA, FLB, and FLC.

6. Wire sizes:

   A. For wire to an ammeter, wire to a frequency meter, and wire carrying input speed reference signals, use at least 16 gauge shielded wire.

   B. For all other control wiring, use at least 12 gauge PVC coated wire.

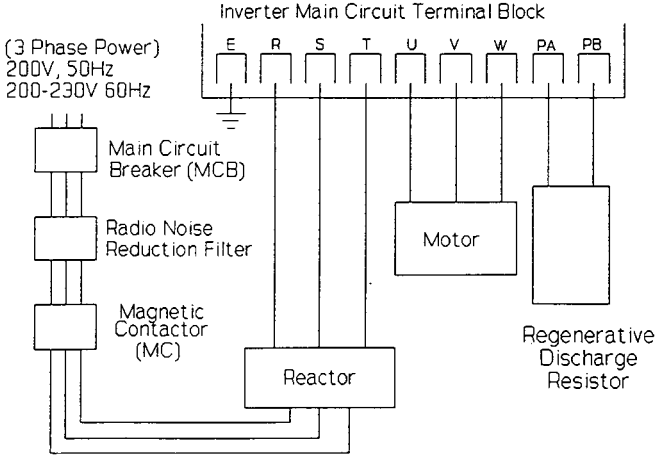


**Figure 5.1 Main Circuit Wiring**

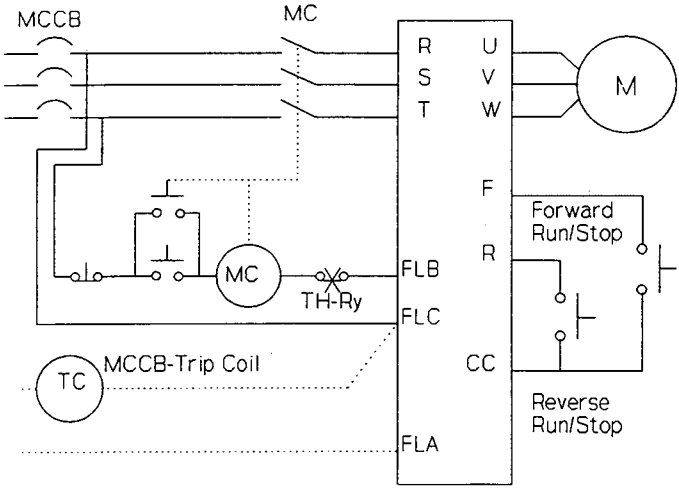


Figure 5.2 Simplified Power and Control Wiring

## 5.2 Installation of a Molded Case Circuit Breaker (MCCB)

1. Install a molded case circuit breaker (MCCB) on the line side of the drive for protection of the incoming power wiring only.

2. Turn the drive ON and OFF via control devices or the touchpad whenever possible, and not by manual operation of the MCCB or MC. Use the control terminals F, R, and CC to receive control signals from the appropriate remote control devices.

## 5.3 Installation of a Primary Magnetic Contactor (MC)

1. Install a magnetic contactor (MC) on the line side of the inverter to prevent restart after either a loss of power, a trip of an external overload relay, or an operation of the internal drive protective device.

2. The VF-SX has an internal fault detection relay. The MC can be opened when the inverter protective circuit operates by connecting this contact point to the primary MC operation circuit.

3. The inverter can be used without an MC. In this case use a shunt trip style main breaker (MCCB) and open the main circuit by tripping the breaker when the inverter protective circuitry operates.

4. When using a braking resistor with an overload relay, install an MC or an MCCB with shunt trip on the line side of the inverter. Connect these devices so that the power circuit will open when the internal fault detection relay (FL) or externally installed overload relay operates. Emergency stop is also possible by connecting the overload relay contact point between the terminals of SS3 (EX) and CC of the inverter. See Chapter 11 for details of the Emergency Stop parameter.

5. Use control signals on terminals F, R, and CC for frequent starting and stopping. Avoid turning the inverter on and off with the primary MC.

6. Always install a surge suppressor across any contactor coil.

## 5.4 Installation of an Output Magnetic Contactor (MC)

1. Avoid starting and stopping the motor with an output contactor (MC) installed between the inverter and the motor. Excessive surge currents could damage the output devices of the drive. Use control signals on terminals F, R, and CC instead.

2. For Bypass Operation: Be sure the motor has stopped and the drive is OFF before turning on the bypass contactor to run the motor directly from line power. Use an external timer, PLC, or similar device as required. Always make sure that the bypass contactor does not allow voltage to backfeed into the inverter output terminals.

## 5.5 Installation of an External Overload Relay

1. An electronic overload relay is standard on the VF-SX drive. However, for the following applications Toshiba recommends installing an overload relay that coordinates with the internal solid state relay and the motor connected to the drive. Connect the external relay between the drive and the motor.

A. When using a motor with non-standard current ratings, or the motor ratings are not comparable to standard duty motors.
B. When operating a single motor smaller than the rating of the drive.
C. When operating several motors simultaneously from the drive. In this case install an overload relay on EACH motor.

2. When applying the VF-SX drive to a constant torque load, change the electronic overload characteristics, or install a separate overload relay. See Chapter 11, Parameter [tHr].

3. When a motor continuously runs at low speeds it is recommended to use a motor with an internal overload relay, for additional protection.

## 5.6 Installation of an Input Reactor

An input reactor is used to suppress high frequency elements and sudden changes in power fluctuations. Install an input reactor when the inverter is connected to electrical systems with the any of the following characteristics:

1. When the power capacity is 200 KVA or more and the power capacity is 10 times or more than the inverter capacity.
2. When the inverter is connected to the same system as a thyristor commutation type controller.
3. When the inverter is wired to an electrical system which also contains a distortion source such as an arc furnace or a large capacity inverter.

## 5.7 Incorrect Wiring and Incorrect External Components

**WARNING:**
**DO NOT INSTALL A POWER FACTOR IMPROVEMENT CAPACITOR ON THE INVERTER INPUT OR OUTPUT.** Current and voltage surges associated with the use of power factor capacitors can damage the drive components.

If power factor correction is required add an optional input line reactor to correct power factor.

Radio Frequency Interference

During operation of the drive there may be noise generated by the drive in the frequency range associated with radio transmission signals. This noise may adversely affect sensitive electronic equipment near the drive. If this condition persists install a RF/EMI (Radio Frequency or Electromagnetic Interference) filter on the input to the drive. Shield the motor leads in metallic conduit. These steps will reduce radio frequency interference. Contact Toshiba for details, or see Chapter 15.

**WARNING:**
Do not operate or energize the inverter before checking between the motor and the inverter for mis-wiring or short circuits in the motor. Do not operate the drive if the motor is shorted. Do not ground the neutral point of the motor star-winding.

## 5.8 Basic Wiring Recommendations

TABLE 5-1: BASIC WIRING RECOMMENDATIONS

| DRIVE MODEL VFSX- | 2001UP | 2002UP | 2004UP | 2007UP | 2015UP1 | 2022UP1 | 2037UP1 |
|---|---|---|---|---|---|---|---|
| KW RATING | 0.1 | 0.2 | 0.4 | 0.75 | 1.5 | 2.2 | 3.7 |
| HP RATING | 1/8 | 1/4 | 1/2 | 1 | 2 | 3 | 5 |
| MCCB SIZE | 5 A | 5 A | 5 A | 10 A | 15 A | 20 A | 30 A |
| MC AMPS (1) | 12 A | 12 A | 12 A | 12 A | 12 A | 12 A | 18 A |
| OL RELAY RATING | 0.7 A | 1.3 A | 2.3 A | 4.2 A | 6.6 A | 9.3 A | 15 A |
| POWER WIRE SIZE | 12 GA | 12 GA | 12 GA | 12 GA | 12 GA | 12 GA | 10 GA |
| CONTROL WIRE SIZE | 18 GA | 18 GA | 18 GA | 18 GA | 18 GA | 18 GA | 18 GA |
| WIRE SIZE FOR REGENERATIVE BRAKING RESISTOR | N/A | N/A | 14 GA | 14 GA | 12 GA | 12 GA | 12 GA |

NOTES:
1. Always use a surge suppression device on the coil of the MC contactor.
2. Use shielded cable on control circuits. See Figure 5.2.
3. Use 10 gauge wire or larger for ground circuit.
4. Power wire sizes in table above are minimum size. For cable lengths over 100 feet, or where voltage drops may cause application problems, larger wire may be required.

# Chapter 6 Standard Connections

The items printed in *Italics* in this chapter are *Parameter* names.

Refer to Chapter 7 for a list of all parameter names and Chapters 8 through 13 for instructions to set or adjust the parameters.

## 6.1 Examples of Standard Wiring

Example 1: To set the operation frequencies, and conduct forward/reverse run and/or decelerating stop from the touchpad.

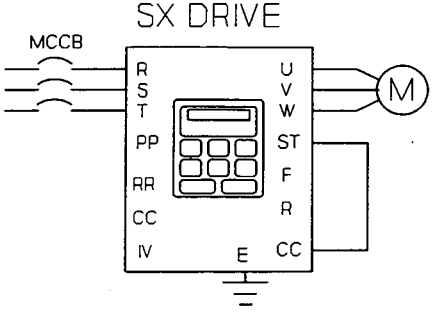


Figure 6.1

Setting: In the parameter group [Gr.St] the *Command Mode Selection* is set to 3 (control terminal or touchpad input). Also, in the same parameter group, the *Frequency Setting Mode Selection* is set to 3 (control terminal or touchpad input). All Model VF-SX drives are shipped with these settings as the factory default settings.

In Figure 6.1 above:

1. Incoming power is 200-230 volts, three phase, 50 or 60 Hz.
2. A factory installed jumper is present between terminals ST and CC.
3. All drive operation is from the touchpad control panel.

Example 2: To set the operation frequencies from the touchpad, and conduct forward/reverse run, decelerating stop, and/or coasting-to-stop with external signals.

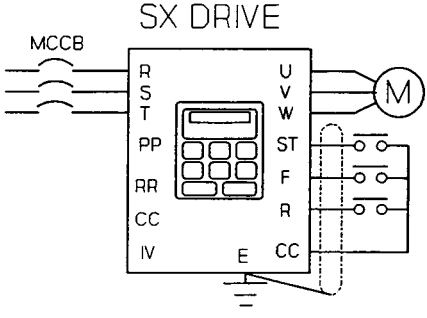


Figure 6.2

Setting: In the parameter group [Gr.St] the *Command Mode Selection* is set to 3 (control terminal or touchpad input). Also, in the same parameter group the *Frequency Setting Mode Selection* is set to 2 (only touchpad input valid).

In Figure 6.2 above:

1. Incoming power is 200-230 volts, three phase, 50 or 60 Hz.
2. When the ST-CC contact is open the drive will "Coast-to-Stop".
3. When the ST-CC contact is closed, and the F-CC contact is closed the drive will run "Forward". If the F-CC contact is opened the drive will decelerate stop.
4. When the ST-CC contact is closed, and the R-CC contact is closed the drive will run "Reverse". If the R-CC contact is opened the drive will decelerate stop.

Example 3: To set the operating frequencies with external signals and conduct the forward/reverse run and decelerating stop from the touchpad.

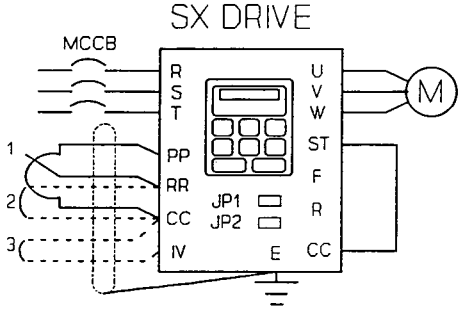


Figure 6.3

Setting: In the parameter group [Gr.St] the *Command Mode Selection* is set to 2 (only touchpad input valid). In the same parameter group the *Frequency Setting Mode Selection* is set to 1 (only terminal input valid). When the external signals are input at Terminal IV (see case 3 above), set *Terminal IV Input*, also in parameter group [Gr.St], to 1 (engaged). In this case, the current input on the IV terminal (4-20mA) will be the standard default setting. When a 0-5V signal is the required control signal, set the jumper JP2 on the PCB to V. When a 0-10V signal is to be chosen the input will be from terminals RR and CC. When using 0-5V set the jumper JP1 on the PCB to 5V.

In Figure 6.3 above:

1. Incoming power is 200-230 volts, three phase, 50 or 60 Hz.
2. Speed reference signal #1 is a potentiometer.
3. Speed reference signal #2 is a 0-10V DC control input signal.
4. Speed reference signal #3 is a 0-20mA, 4-20mA, or 0-5V DC control input signal.
5. Jumpers JP1 and JP2 are shown in their approximate location on the internal printed circuit board, behind the front cover.

Example 4: To set the operation frequencies, and conduct forward/reverse run, decelerating stop and coasting stop with external signals.

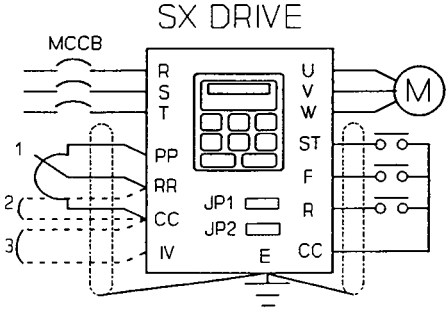


Figure 6.4

Setting: In the parameter group [ Gr.St ] the *Command Mode Selection* is set to 3 (control terminal or touchpad input), and the *Frequency Setting Mode Selection* to 3 (control terminal or touchpad input). These are the standard default settings. To carry out automatic operation with case 3 (4-20mA signal) from remote controls and manual operation with the case 1 potentiometer set the *RR Terminal Input Prioritization* to 1 and *IV Input* to 1. Manual setting values are then accepted if the potentiometer is turned to generate a voltage between RR and CC. Emergency stop is possible from the touchpad when the STOP RESET key is pressed twice.

In Figure 6.4 above:

1. Incoming power is 200-230 volts, three phase, 50 or 60 Hz.
2. Speed reference signal #1 is a potentiometer.
3. Speed reference signal #2 is a 0-10V DC control input signal.
4. Speed reference signal #3 is a 0-20mA, 4-20mA, or 0-5V DC control input signal.
5. Jumpers JP1 and JP2 are shown in their approximate location on the internal printed circuit board, behind the front cover.

Example 5: To set the VF-SX inverter for operation when a braking resistor is connected. (This resistor is an optional device.)

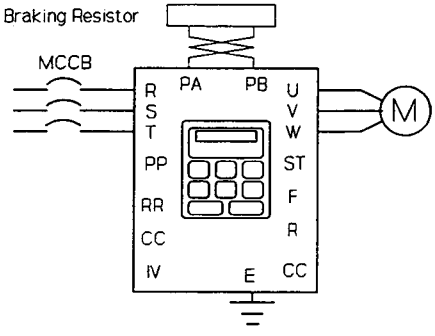


Figure 6.5

Setting: Set the *Regenerative Discharge Braking Selection* to 2. (Enable the braking resistor overload detection.)

In Figure 6.5 above:

1. Incoming power is 200-230 volts, three phase, 50 or 60 Hz.

## 6.2 Terminal Functions

The arrangement of the control and power terminal blocks is shown in Figures 6.6, 6.7, and 6.8. The functions associated with the parameters listed on the terminal blocks are shown in Table 6-1.

**Control Circuit Terminals**

| | | | | | | | | | | | |
|---|---|---|---|---|---|---|---|---|---|---|---|
| RST | AD2 | CC | SS1 | SS2 (JOG) | SS3 (EX) | CC | FM (AM) | CC | FLA | FLB | FLC |
| F | R | ST | CC | PP | PR | IV | CC | RCH (UL) | LOW (LL) | P24 | |

Figure 6.6

**Main Circuit Terminals (Three Phase)**

| | | | | | | | | |
|---|---|---|---|---|---|---|---|---|
| E/G | R/L1 | S/L2 | T/L3 | U/T1 | V/T2 | W/T3 | PA | PB |

Figure 6.7

**Main Circuit Terminals (Single Phase)**

| | | | | | | | | |
|---|---|---|---|---|---|---|---|---|
| E/G | L1/L | (L2) | L3/N | T1/U | T2/V | T3/W | PA | PB |

Figure 6.8

# Chapter 7 Parameter Groups

## 7.1 Definitions of SX Drive Group Parameters

[Gr.U]: **USER PARAMETERS**
This display shows all parameters which have been changed from factory preset values. This is a quick, easy way to examine drive parameters and tell at a glance which parameters or functions have been changed, without having to search through all the menus to examine each parameter and compare the value to the factory preset value.

[Gr.F]: **FUNDAMENTAL PARAMETERS** (See Chapter 9)
This set of values contains adjustable parameters considered "fundamental" to drive operation and application. These include acceleration and deceleration times, base frequency, forward and/or reverse operation, upper and lower operating frequency limits, and options for the Volts Per Hertz (V/f) ratios. The option to reset the drive to all factory preset values or clear all past trips is available from this menu.

[Gr.St]: **TERMINAL SELECTION PARAMETERS** (See Chapter 10)
This set of values defines how different input and output terminals will function during drive operation and affect drive operation. Virtually all commands required for remote control or automatic operation of the drive are found in these parameters. These functions allow the drive to signal when an upper or lower limit has been reached, if the drive is running in forward or reverse, and if the drive is accelerating or decelerating. Enabling or disabling various control terminals and setting up multiple speed running conditions is available from this menu.

[Gr.Pr]: **PROTECTIVE FUNCTION PARAMETERS** (See Chapter 11)
This set of values defines the type and amount of motor protection which will be enabled during operation of the motor and driven load. Emergency stop, DC injection braking, restart or "retry", current and voltage limits, stall enable and parameters, and trip history are located in these parameters. The programmable settings of the electronic overload as recognized by the National Electrical Code are included in this section.

[Gr.CC]: **CONTROL AND COMMUNICATION PARAMETERS** (See Chapter 12)
This set of values identifies critical frequency parameters. These include the PWM carrier frequency, motor tone selection, initial startup frequency, jump frequency for critical resonance protection, automatic torque boost, slip frequency compensation, and frequency hysteresis, which precludes rapid ON/OFF cycling around a setpoint.

[Gr.AM]: **METER ADJUSTMENT PARAMETERS** (See Chapter 13)
These parameters control and adjust the scaling of the signals which drive remote ammeters or frequency meters, provide bias and gain adjustments, and define the Universal Unit Multiplication Factor, an output scaled to Hz, but user defined to some other parameter other than frequency.

## 7.2 Parameter Group Tables

TABLE 7-1: BASIC LIST OF PARAMETER GROUPS

| Parameter Group | Gr. __ | U : User Parameter<br>F : Fundamental<br>St : Selection of Terminal<br>Pr : Protection<br>CC : Control and Communication<br>AM : Adjustment of AM/FM Meter |
|---|---|---|

TABLE 7-2: PARAMETER GROUP [Gr.U] - USER MODIFIED PARAMETERS

| Function | Title | Adjustment Range | Unit | Shipment | Page |
|---|---|---|---|---|---|
| * Display of user modified parameters | | (According to each parameter adjustment range) | | | |

* Only the parameters that have a set value that differs from the standard default value will be displayed.

* When the parameter value is changed to be the standard default value, as listed in the tables below, that parameter will be removed from this group.

TABLE 7-3: PARAMETER GROUP [Gr.F] - FUNDAMENTAL PARAMETERS

| Function | Title | Adjustment Range | Unit | Ship-ment | User Setting | Page |
|---|---|---|---|---|---|---|
| Maximum Frequency | FH | 30 -- 240 | 0.1 HZ | 80 | | 9-4 |
| Base Frequency | uL | 25 -- 240 | 0.1 HZ | 60 | | 9-5 |
| Torque Boost | ub | 0 -- 30 | 1% | 3 | | 9-7 |
| V/f Pattern | Pt | 0: Constant Torque<br>1: Variable Torque | | 0 | | 9-8 |
| Upper Limit Frequency | UL | 0.5 -- Maximum Frequency | 0.1 HZ | 80 | | 9-9 |
| Lower Limit Frequency | LL | 0 -- Upper Limit Frequency | 0.1 HZ | 0 | | 9-9 |
| Forward/Reverse Run Selection | Fr | 0: Reverse Run<br>1: Forward Run | | 1 | | 9-10 |
| Acceleration Time 1 | ACC1 | 0.1 -- 3600 | 0.1 Sec | 10 | | 9-14 |
| Deceleration Time 1 | dEC1 | 0.1 -- 3600 | 0.1 Sec | 10 | | 9-14 |
| Acc./Dec. 1 Pattern | Pt1 | 0: Linear<br>1: S-Character 1<br>2: S-Character 2 | | 0 | | 9-15 |
| Acceleration Time 2 | ACC2 | 0.1 -- 3600 | 0.1 Sec | 10 | | 9-14 |
| Deceleration Time 2 | dEC2 | 0.1 -- 3600 | 0.1 Sec | 10 | | 9-14 |
| Acc./Dec. 2 Pattern | Pt2 | 0: Linear<br>1: S-Character 1<br>2: S-Character 2 | | 1 | | 9-15 |
| Acc./Dec. 1 or 2 Selection | Ad2 | 0: Acceleration/Deceleration 1<br>1: Acceleration/Deceleration 2<br>2: Changeover of Acc./Dec. Pattern 1 or 2 | | 0 | | 9-17 |
| Frequency for Switching Between Acc./Dec. 1 and 2 (*) | Ad2F | 0 -- Maximum Frequency | 0.1 HZ | 0 | | 9-17 |
| Drive Mode Selection | tYP | 0: No Input is Enabled<br>1: General Purpose 50 HZ Settings<br>2: General Purpose 60 HZ Settings<br>3: Standard Default Value Settings<br>4: Clear Past Errors | | (**) | | 9-19 |

The parameters marked with an asterisk (*) will be displayed as detailed parameters only when the parameter in the row immediately above this function is selected for adjustment or review.

(**) "0" is always displayed for this parameter

## TABLE 7-4: PARAMETER GROUP [Gr.St] - TERMINAL SELECTION PARAMETERS

| Function | Title | Adjustment Range | Unit | Ship-ment | User Setting | Page |
|---|---|---|---|---|---|---|
| Command Mode Selection | CMOd | 0: No Input is Enabled<br>1: Only Remote Input Valid<br>2: Only Touchpad Input Valid<br>3. Use Terminal or Touchpad | | 3 | | 10-2 |
| Frequency Setting Mode Selection | FMOd | 0: No Input is Enabled<br>1: Only Remote Input Valid<br>2: Only Touchpad Input Valid<br>3: Use Terminal or Touchpad | | 3 | | 10-3 |
| Parameter Setting Disable Selection | PMOd | 0: Setting Disabled<br>1: Setting Enabled | | 1 | | 10-3 |
| Input Terminal Selection | Itb | 0: SS2, SS3<br>1: JOG, SS3<br>2: SS2, EX<br>3: JOG, EX | | 0 | | 10-4 |
| Output Terminal Selection | Otb | 0: LL, UL<br>1. LOW, UL<br>2. LL, RCH<br>3. LOW, RCH | | 3 | | 10-6 |
| Low-Speed Signal Output Frequency | LF | 0 -- Maximum Frequency | 0.1 Hz | 0.5 | | 10-7 |
| Low-Speed Signal Logic Selection | LFHL | 0: Open Collector Output OFF<br>1: Open Collector Output ON | | 0 | | 10-7 |
| Speed-Reach Frequency | FrCH | 0 -- Maximum Frequency | 0.1 HZ | 0 | | 10-7 |
| (If other than "0"): Speed Selection Reached (*) | rCH | 0: Signal is output when Acc/Dec is completed.<br>1: Specified frequency reach signal output. | | 0 | | 10-7 |
| Speed Reached Detection Range (*) | rrCH | 0 -- Maximum frequency | 0.1 HZ | 2.5 | | 10-8 |
| IV Input | IuIn | 0: Disengaged<br>1: Engaged | | 0 | | 10-12 |
| (*)<br>IV Point 1 Setting Signal | P1 | 0 -- 100 | 1 % | 20 | | 10-12 |
| IV Point 1 Frequency | F-P1 | 0 -- Maximum Frequency | 0.1 HZ | 0 | | 10-12 |
| IV Point 2 Setting Signal | P2 | 0 -- 100 | 1 % | 100 | | 10-12 |
| IV Point 2 Frequency | F-P2 | 0 -- Maximum Frequency | 0.1 HZ | 80 | | 10-12 |
| RR Terminal Input Prioritization | rrCC | 0: Normal<br>1: RR Prioritized | | 0 | | 10-12 |
| Jogging Run Frequency | JOG | 0 -- 20 | 0.1 HZ | 0 | | 10-14 |
| (Other than 0 HZ) Jogging Stop Pattern (*) | JStP | 0: Decelerating stop<br>1: Coasting stop<br>2: DC injection braking stop | | 0 | | 10-14 |

TABLE 7-4: PARAMETER GROUP [Gr.St] - TERMINAL SELECTION PARAMETERS (CON'T)

| Function | Title | Adjustment Range | Unit | Ship-ment | User Setting | Page |
|---|---|---|---|---|---|---|
| Multi-Speed Run | Sr.n | 0: Multiple Speed Run Disengaged<br>1: Multiple Speed Run Engaged | | 0 | | 10-17 |
| 1st Run Frequency (*) | Sr1 | Lower Limit Frequency - Upper Limit Frequency (Same for all frequencies) | 0.1 HZ | 0 | | 10-17 |
| 2nd Run Frequency (*) | Sr2 | | 0.1 HZ | 0 | | |
| 3rd Run Frequency (*) | Sr3 | | 0.1 HZ | 0 | | |
| 4th Run Frequency (*) | Sr4 | | 0.1 HZ | 0 | | |
| 5th Run Frequency (*) | Sr5 | | 0.1 HZ | 0 | | |
| 6th Run Frequency (*) | Sr6 | | 0.1 HZ | 0 | | |
| 7th Run Frequency (*) | Sr7 | | 0.1 HZ | 0 | | |

The parameters marked by an asterisk (*) will be displayed as detailed parameters only when the parameter in the row immediately above this function is selected for adjustment or review.

TABLE 7-5: PARAMETER GROUP [Gr.Pr] - PROTECTIVE FUNCTION PARAMETERS

| Function | Title | Adjustment Range | Unit | Shipment | User Setting | Page |
|---|---|---|---|---|---|---|
| Regenerative Discharge Braking Selection | Pb | 0: Regenerative Discharge Braking Disengaged<br>1: Regenerative Discharge Braking Engaged without Overload Protection<br>2: Regenerative Discharge Braking Engaged with Overload Detection | | 0 | | 11-2 |
| Overvoltage Limiting Action Selection | OPSS | 0: Engaged<br>1: Disengaged | | 0 | | 11-2 |
| DC Undervoltage Startup Frequency | dbF | 0 -- 10 | 0.1 HZ | 0 | | 11-4 |
| (Other than 0) (*) DC Injection Braking Voltage | dbu | 0 -- 20 | 1 % | 0 | | 11-4 |
| DC Injection Braking Time | dbt | 0 -- 5 | 0.1 Sec | 0 | | 11-4 |
| Emergency Stop | EStP | 0: Coasting Stop<br>1: Decelerating Stop<br>2: Emergency DC Injection Braking Stop (EDB) | | 0 | | 11-6 |
| (2) Emergency DC Injection Braking Stop Control Time (*) | Edbt | 0 -- 10 | 0.1 Sec | 0.1 | | 11-8 |
| Retry Selection | rtry | 0: OFF<br>1: ON | | 0 | | 11-8 |
| Power Control Function Selection | UuC | 0: OFF<br>1: ON | | 0 | | 11-10 |
| Electronic Thermal Protective Level | tHr | 10 -- 100 | 1 % | 100 | | 11-11 |
| Stall Prevention Activation Level | StL | 10 -- 150,<br>(200: Non-operating) | 1 % | 150 | | 11-11 |
| Electronic Thermal Protection Characteristic Selection | OLn | 0: Standard Motor without SS<br>1: Standard Motor with SS<br>2: VF Motor without SS<br>3: VF Motor with SS<br>(Note: SS = Soft Stall) | | 0 | | 11-11 |
| Trip Retention Selection | trCL | 0: Clear with Power OFF<br>1: Retain Even with Power OFF | | 0 | | 11-13 |

The parameters marked with an asterisk (*) will be displayed as detailed parameters only when the parameter in the row immediately above this function is selected for adjustment or review.

TABLE 7-6: PARAMETER GROUP [Gr.CC] - CONTROL AND COMMUNICATION PARAMETERS

| Function | Title | Adjustment Range | Unit | Shipment | User Setting | Page |
|---|---|---|---|---|---|---|
| Start-up Frequency Setting | F-St | 0.5 -- 10 | 0.1 HZ | 0.5 | | 12-3 |
| Operation Starting Frequency | Frun | 0 -- Maximum Frequency | 0.1 HZ | 0.5 | | 12-4 |
| Operation Starting Frequency Hysteresis | FHYS | 0 -- Maximum Frequency | 0.1 HZ | 0 | | 12-4 |
| Jump Frequency | FJ.n | 0: Jump Function OFF<br>1: Jump Function Engaged | | 0 | | 12-5 |
| Jump Frequency 1 (*)<br>Jump Width 1 (*) | FJ1<br>bFJ1 | 0 -- Maximum Frequency<br>0 -- 30 | 0.1 HZ<br>0.1 HZ | 0<br>0 | | 12-5<br>12-5 |
| Jump Frequency 2 (*)<br>Jump Width 2 (*) | FJ2<br>bFJ2 | 0 -- Maximum Frequency<br>0 -- 30 | 0.1 HZ<br>0.1 HZ | 0<br>0 | | 12-5<br>12-5 |
| Jump Frequency 3 (*)<br>Jump Width 3 (*) | FJ3<br>bFJ3 | 0 -- Maximum Frequency<br>0 -- 30 | 0.1 HZ<br>0.1 HZ | 0<br>0 | | 12-5<br>12-5 |
| PWM Carrier Frequency | CF | 0.5 -- 3 | 0.1 kHZ | 2 | | 12-6 |
| Motor Tone Selection | CFS | 0: Monotonous Tone<br>1: Integral Tone | | 0 | | 12-6 |
| Output Voltage Adjustment | POUt | 0 -- 100 (0 -- 120) | 1 % | 100 | | 12-6 |
| Power Voltage Compensation | PAdJ | 0: Not Compensated<br>1: Compensated | | 0 | | 12-6 |
| Automatic Torque Boost | Aub | 0: Engaged<br>1: Disengaged | | 0 | | 12-8 |
| No-load current (*)<br>Maximum torque boost value (*) | CUr0<br>ubH | 0 -- 50<br>0 -- 30 | 1%<br>1% | 10<br>6 | | 12-9<br>12-9 |
| Slip Frequency Compensation | SFC | 0: Not compensated<br>1: Compensated | | 0 | | 12-10 |
| No-load current (*)<br>Motor slip frequency rating (*) | CUr0<br>SFr | 0 -- 50<br>0 -- 10 | 1%<br>0.1 HZ | 10<br>3 | | 12-11<br>12-11 |

The parameters marked with and asterisk (*) will be displayed as detailed parameters only when the parameter in the row immediately above this function is selected for adjustment or review.

TABLE 7-7: PARAMETER GROUP [Gr.AM] - PARAMETERS FOR METER ADJUSTMENT

| Function | Title | Adjustment Range | Unit | Shipment | User Setting | Page |
|---|---|---|---|---|---|---|
| Connected Meters Adjustment (See Below) | FMAM | 0: Frequency Meter Connection | | 0 | | 13-2 |
| (0) Frequency Meter Adjustment (*)<br>(1) Ammeter Adjustment (*) | FM<br>AM | (See Chapter 13) | | | | 13-2<br>13-3 |
| Adjustment of the RR input terminal bias | rr-b | 0 -- 255 | 1 | 64 | | 13-5 |
| Adjustment of the RR input terminal gain | rr-G | 0 -- 255 | 1 | 128 | | 13-5 |
| Universal Unit Multiplication Factor | dSP2 | 0: OFF, or 0.01 -- 200 | | 0 | | 13-7 |

The parameters marked with an asterisk (*) will be displayed as detailed parameters only when the parameter in the row immediately above this function is selected for adjustment or review.

# Chapter 8 Basic Operation Theory

This portion of the manual explains some of the most simple methods of operation of the Toshiba VF-SX variable speed drive.

OPERATION FROM THE TOUCHPAD IS ASSUMED FOR ALL EXAMPLES IN THIS CHAPTER, UNLESS OTHERWISE NOTED.

## 8.1 Operation of the Touchpad Control Panel

The inverter operation, functions, and data settings can be monitored with the touchpad control panel.

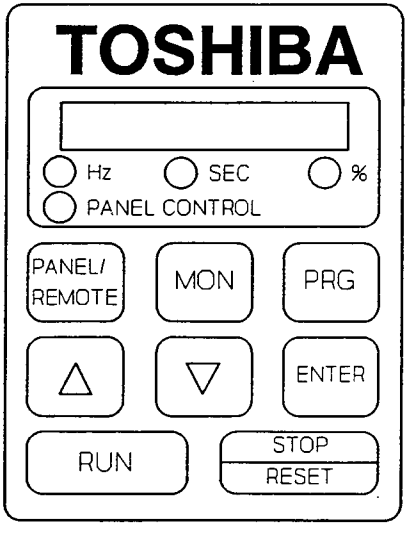


Figure 8.1 Layout of the Control Panel (Touchpad)

PANEL/ REMOTE

The "PANEL/REMOTE" key is used to switch the SX drive between panel control (operation from the touchpad) and remote control - control from remote signals attached to the correct input terminal blocks.

MON

The "MON" (Monitor) key is used to make the display show any monitored value available, such as forward or reverse run, % amps, assigned run frequency, past trip data, or other items. See 8.2.2 in this chapter for a complete explanation.

PRG

The "PRG" (Program) key is similarly used to switch the drive from other modes of operation to the "Program" mode, and thereby allow programming or changing of the numerous parameters as required to match operating conditions.

△

The "UP ARROW" key is used to increase parameter settings, scroll upwards through program group parameters, or upward through monitor values.

▽

The "DOWN ARROW" key is used to decrease parameter setting, scroll downwards through program group parameters, or downward through monitor values.

ENTER

The "ENTER" key is used to select or set a value of any parameter such as run frequency or other data into permanent memory.

The "RUN" key is used to start operation of the drive. It is valid ONLY when the "PANEL CONTROL" LED is lit.

The "STOP/RESET" key stops operation of the drive, when the drive is in "PANEL CONTROL" mode. Emergency stop operation is possible by pressing this key TWICE, when the drive is in any other mode. The inverter is reset from this key (depress for 1 second, minimum) after a trip.

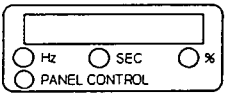


This 7 segment, 4 digit LED display shows operating frequency in DRIVE mode, the status of a variety of data in the MONITOR mode, the title of the parameter groups, and the values of these parameters in the PROGRAMMING mode. In the event of a trip, the cause of this trip is displayed. The "Hz", "SEC", "%", or "PANEL CONTROL" LED's will be illuminated as appropriate in all modes.

## 8.2 Display Modes

The Toshiba Model SX inverter has four types of operation and display modes, as shown below:

1. Drive Mode
2. Monitor Mode
3. Programming Mode
4. Jogging Mode

For basic drive operation, this section of the manual will discuss all of these modes as they apply when using the touchpad to operate the drive. There are many options for remote control of the drive discussed in later chapters of this manual.

Enter Monitor Mode by pressing the MON key. To re-enter Drive Mode press the MON key again. Enter Programming Mode by pressing the PRG key. To return to Drive Mode press the PRG key again. If there is no input within 3 seconds from depressing the MON or PRG the drive will automatically return to Drive Mode and display the frequency.

## 8.2.1 Drive Mode

The Drive Mode is automatically selected every time power is initiated to the drive. In this mode the inverter output frequency monitoring and the frequency setting command value is taken from non-volatile memory and implemented. A status warning (indicating a possible trip) is displayed during operation, if this condition is warranted. Trip information for any type of trip is displayed whenever the inverter is tripped OFF. The LED monitor display will show these trip codes.

If no warning or trip has occurred the LED display shows the frequency value. This is the frequency which the drive sends to the motor. When the drive is first energized the display will read 0.0. The "HZ" LED beneath the LED display will be lit, indicating the display is showing a value of frequency.

A status warning indicator is a one of three flashing characters to the left of the frequency in the LED display. These characters indicate an overcurrent condition, an overvoltage condition, or an overload condition. Under most circumstances, if these conditions are not cleared the drive will eventually trip.

If the drive does trip, the trip code indicating the cause of that particular trip will be displayed on the LED monitor display. See Chart 1 below for a summary of all trip codes. See Chapter 16 for a brief discussion about potential solutions to drive trips.

1. Setting or Changing an Output Frequency

To implement a frequency change press the [△] or [▽] keys while the drive is in the Drive Mode. If the frequency command value is changed during operation, the operating frequency will also change accordingly. If the frequency command value is different from the operating frequency then acceleration or deceleration will occur, based on the accel/decel time parameters currently programmed in the drive. It is possible to prevent a frequency change from the touchpad, by changing the parameter *Frequency Setting Mode Selection* [FMOd]. See Chapter 10.

2. Status Warning

A warning character and a frequency value are sometimes displayed alternately on the LED display when running in the drive mode. The following three warning characters can be displayed:

[C]..... When a current more than the overcurrent stall level is detected.
[P]..... When a voltage more than the overvoltage stall level is detected.
[L]..... When the overload trip parameter (tHr) calculates that output current has exceeded more than approximately 75% of the trip value.

These alarm displays will turn off automatically when the alarm conditions no longer exist. Typically, the drive will eventually trip OFF if any one of these conditions persists. See section 8.8 in this chapter for more details.

3. Trip Information

If the VF-SX drive trips while in the Drive Mode, the cause or type of this trip will be displayed immediately on the LED monitor display. The display will continuously flash a trip code indicating the cause of the trip. Furthermore, the registered trip status can be read out from drive memory.

The flashing trip display will remain on continuously until the power is turned "OFF" or the trip is cleared. Refer to Section 8.7 -- Error Reset, (in this chapter) for instructions to clear a trip, return to the Drive Mode, and run the drive.

Table 8-1 below shows a list of all trip codes which the drive can display. This information is also available in the Appendix.

Table 8-2 below shows an example of a drive trip occurrence, and of the data stored for examination in drive memory when a trip occurs. Six other parameters describing the software versions and past trip history can also be observed by stepping further into the menu shown in this Table. Press the [▽] or [▽] keys to scroll through this data. If the [MON] key is pressed next the initial trip code will be shown.

If the [△] or [▽] keys are pressed continuously during this procedure, the displayed item will change every 0.5 seconds and display in order. The display can be changed to the trip information display status by pressing the [MON] key at any time during this procedure.

TABLE 8-1: LIST OF TRIP CODES AND EXPLANATIONS

| Display | Explanation |
|---|---|
| OC1 | Overcurrent trip (OC) during acceleration. |
| OC2 | Overcurrent trip (OC) during deceleration. |
| OC3 | Overcurrent trip (OC) during operation. |
| OCL | Load side overcurrent (output terminal check trip at start-up). |
| OCA | Arm overcurrent (GTR check) trip at start. |
| OP | Overvoltage (OP) detected on DC bus. |
| OP2 | Overvoltage (OP) detected on DC bus during deceleration. |
| OH | Inverter overheating (OH) trip. |
| OL | Motor overload (OL) trip. |
| E | Emergency Stop. |
| EEP | EEPROM abnormality (adjustment or other data). |
| Err2 | RAM abnormality. |
| Err3 | ROM abnormality. |
| OLr | Overload trip in regenerative discharge braking resistor. |

TABLE 8-2: SAMPLE OF TRIP OCCURRENCE

| Key Guide | Display | Explanation |
|---|---|---|
| | 0C3 | Drive Mode (flashing display). Motor coasts. |
| MON | : 50.0 | Operating frequency during trip. |
| ▽ | : Fr F | Operation direction during trip. |
| ▽ | : 60.0 | Operating frequency command value during trip. |
| ▽ | : C 150 | Load current during trip, in %. |
| ▽ | : Y 100 | Input voltage during trip (% of 200 VAC) |
| ▽ | : P 90 | Output voltage during trip. |
| ▽ | : | Input terminal status during trip. (See Appendix). |
| ▽ | : | Output terminal status during trip. (See Appendix). |

Use of the △ key at any time will allow review of the previous item or value, or scroll "upward" through these values in the opposite direction.

## 8.2.2 Monitor Mode

The Monitor Mode allows a user to examine the status of several key operating conditions of the drive. These conditions are listed in Table 8-3. Consult the Appendix in the back of this manual as well, for an interpretation of the input and output terminal information.

This mode is activated by depressing the MON key, when running in the Drive Mode. To return to the Drive Mode press the MON key again. To go to the Programming Mode press the PRG key.

TABLE 8-3: MONITOR OPERATION EXAMPLES OF THE DRIVE WHILE IN DRIVE MODE

| Key Guide | Display | Explanation |
|---|---|---|
| | 0.0 | Drive mode (frequency is displayed) |
| MON | : FrF | Forward [F] / Reverse [r]. |
| ▽ △ | : 60.0 | Frequency command value. |
| ▽ △ | : C 50 | Load current (%) being monitored. |
| ▽ △ | : Y 100 | Input voltage (% of 200 VAC) being monitored. |
| ▽ △ | : P 75 | Drive output voltage (%) |
| ▽ △ | : | Input terminal information (refer to Appendix). |
| ▽ △ | : | Output terminal information (refer to Appendix). |
| ▽ △ | : U 120 | The version number of software on the drive CPU. |
| ▽ △ | : UE 0 | The version number of software on the EEPROM. |
| ▽ △ | :OC3⟷1 | (Display alternates) The most recent trip. |
| ▽ △ | : OH⟷2 | (Display alternates) The second most recent trip. |
| ▽ △ | : OP⟷3 | (Display alternates) The third most recent trip. |
| ▽ △ | : OL⟷4 | (Display alternates) The fourth most recent trip. |
| ▽ △ | : FrF | Operation direction display. (rollover to the 1st menu item). |

If either the [△] or [▽] keys are pressed continuously during the above procedure, the display will scroll every 0.5 seconds to the next item.

At any time during the MONITOR operation depress the [MON], [RUN], or [STOP RESET] keys which will cause the inverter to revert to the Drive Mode, or depress the [PRG] key and enter to the Programming Mode. Switching to the "REMOTE" mode to implement some form of remote control is also possible, but only if the drive is stopped. The ⟷ arrow key above in the trip history display shows that the data is alternately displayed every 0.5 seconds.

## 8.2.3 Programming Mode

This mode is activated by pressing the [PRG] key from the Drive Mode. To return to the Drive Mode press the [PRG] key again, or to enter the Monitor Mode press the [MON] key.

The Programming Mode is used to examine and revise all the drive parameters, including the parameter display, setting functions, and adjustment functions.

**Parameter Settings and Display Function**

The following procedure describes how to set or change the parameters values.

A. Enter the Programming Mode (Press the [PRG] key.)
B. In the group display state, select the desired group parameter with the [△][▽] keys, press the [ENTER] key, and move to the parameter name display state.
C. After entering the parameter name display state, select the desired parameter name with the [△][▽] keys, press the [ENTER] key, and move to the value display state.
D. In the value display state, set the data with the [△][▽] keys.
E. Store the new values into the main memory with the [ENTER] key.

Refer to section 1 of this chapter for a description of how to operate the touchpad keys. Refer to Chapter 7 for the list of all drive parameters.

## 8.2.4 Jogging Mode from the Touchpad

This mode is used to operate the inverter at a low speed for brief intervals. Short time operation ("inching") can be performed easily. The following operations make use of the touchpad. It is also possible to use remote control signals for the [JOG] feature. See Chapter 10 for instructions.

NOTE: Remember to set the Jog Run Frequency [JOG] and Jog Stop Pattern [JSTP]before using the Jog feature. See the Chapter 10 for instructions.

After these parameters are set, enter the Jogging Mode with touchpad control by performing the following programming steps. Be sure the "PANEL CONTROL" LED is ON.

TABLE 8-4: KEYSTROKES TO ENTER JOG FUNCTION FROM THE TOUCHPAD

| Keys | Display | Explanation |
|---|---|---|
| PRG<br>PRG | : Gr.U<br>:FJOG | Press the PRG key TWICE. The jogging mode is not activated by any other keys. When using the touchpad for jogging, and the jog frequency is set to some value other than 0 HZ, the jogging mode is activated by the second PRG keystroke. When not using the touchpad or when the jogging run frequency is not set, the second keystroke of the PRG will return the drive to drive mode (frequency display). |
| ▽ | :rJOG | Press the ▽ key to "jog run" reverse.<br>Press the △ key to "jog run" forward. |
| RUN | 5.0 | The jog setting frequency will be output to the motor while the RUN key is depressed. |
| PRG | 0.0 | The return to the Drive Mode press the PRG key. |

## 8.3 PANEL/REMOTE Control

Either the "PANEL" mode or the "REMOTE" mode of drive control may be selected.

In the "REMOTE" mode any commands from the touchpad are ignored (except EMERGENCY STOP). A brief explanation of the Emergency Stop function is shown in Section 8.4 in this chapter. See Chapter 11.3 for a complete explanation of the EMERGENCY STOP function.

In the "PANEL" mode all commands from control signals connected to the terminal blocks are ignored, including speed pots and 4-20mA input signals.

Switching between the "PANEL" and "REMOTE" modes is accomplished with the [PANEL/REMOTE] key on the touchpad. This setting can only be changed while the drive is stopped. The LED display shows 0.0 when the drive is stopped.

The *Command Mode* can be set so that "PANEL" control or "REMOTE" control is never possible. See Chapter 10, parameter [CMOd], for an explanation.

When power is first turned ON the drive is energized in the drive mode. If the drive is controlled from the touchpad the LED indicating "PANEL CONTROL" will be illuminated. If the drive is not controlled by the touchpad this LED will not be on, and the drive will accept input control signals from the terminal blocks.

## 8.4 Selection of Stopping Method from the Touchpad

The following three methods can be selected for stopping the drive from the touchpad. All three methods use the [STOP RESET] key to implement a stop command to the motor from the drive, as described below.

**METHOD 1 -- Ramp Stop When the Drive is in <u>Panel Control</u>**

Step 1. Press the [STOP RESET] key on the touchpad.
The drive will DECELERATE at the programmed rate to a complete stop.

**METHOD 2 -- Coasting Stop When the Drive is in Panel Control**

Step 1. Press the STOP/RESET key on the touchpad.
The frequency display is removed from the LED display and [CtrL] is displayed on the LED screen.

Step 2. Press the STOP/RESET key on the touchpad.
The drive will turn off power to the motor and the motor will COAST to a stop as the driven load allows.

**METHOD 3 -- Emergency Stop When the Drive is NOT in Panel Control**

Step 1. Press the STOP/RESET key on the touchpad.
The drive mode is activated and the LED will display [EOFF]

Step 2. Press the STOP/RESET key again.
[E] (flashing) will be displayed on the LED and Emergency Stop will be activated. Emergency Stop can be Coasting, Decelerating, or DC Injection Braking type, depending on the programmed parameters for this method of stopping.

[ESTP] (Emergency Stop) Settings are:

0 : Coasting Stop
1 : Decelerating Stop
2 : Emergency DC Injection Braking Stop

When 2 is selected also set the DC injection braking time [Edbt], DC injection braking start frequency [dbF], and the DC injection braking amount [dbU].

When [ESTP] = 2 is chosen (Emergency DC Injection Braking Stop), and the DC injection braking is NOT required during normal stop, set the DC injection braking time to [dbt] = 0.

**CAUTION:**

The Emergency Stop command is a command to forcibly stop the operation by depressing the inverter unit keys on the touchpad when the drive is not controlled from the touchpad. This cannot be prohibited by any setting of the Command Mode. The emergency stop will be regarded as a trip and will be registered as a past error in the trip history section of the drive memory.

## 8.5 Starting the Drive from the Touchpad

After confirming all wiring is connected to the proper terminals, the inverter may be operated using factory default settings, via the touchpad. This is the most simple mode of operation for the inverter. This can serve as a simple test for the inverter/load combination. (See Chapter 6 for a brief look at the most simple methods of control and power wiring for the drive.)

The factory default settings for all parameters are shown in Chapter 7.

It is recommended to start the initial run at a low frequency/speed for any test operation.

Table 8-5 shows the touchpad keystroke sequency for starting the drive.

TABLE 8-5: STARTING THE DRIVE FROM THE TOUCHPAD

| Procedure | Operation |
|---|---|
| Power On | Turn on power to the inverter with the MCCB. If the display shows [OFF], the proper operating conditions are not set, and operation will not be possible. Close the connection between terminals ST and CC. Operation is possible if [0.0] is displayed. |
| PANEL/REMOTE | Change to Panel Control by pushing the PANEL/REMOTE key. The "PANEL CONTROL" LED will turn on. Operation from the touchpad will now be possible. If the PANEL/REMOTE button is pushed again, the light will turn off, and touchpad control will be deactivated. |
| △ ▽ ENTER | Adjustment of the operating frequency/speed is accomplished from the △ and ▽ keys on the touchpad. When these keys are depressed the "PANEL CONTROL" light will flicker, indicating the numerical value in the LED display is changing. When the desired frequency is shown press the ENTER key and the display will alternately show FC and the frequency, in order. When the ENTER key is depressed the assigned running frequency is stored in the drive's memory. |
| RUN | Depressing this key will energize the output circuits. The frequency display will begin to increase at the programmed acceleration rate, and the motor will begin to rotate. |
| STOP RESET | Depressing the STOP RESET key will cause the inverter to ramp the load to a stop at the programmed deceleration rate. |

## CAUTION:

If the power switch is turned OFF during step 4 above, the motor will coast to stop. However, **DO NOT** stop the inverter in this fashion unless there is an emergency. Always avoid starting and stopping the inverter from the power switch.

## 8.6 Changing Frequency from the Touchpad

The running frequency can be changed before the drive ever runs the motor. Be sure the drive is in the "PANEL CONTROL" mode.

Continuously depress the [△] or [▽] keys on the touchpad. The display will rapidly scroll through the frequencies available to run the motor. Fine tune the desired frequency by pressing the arrow keys, incrementing the frequency by 0.1 HZ each time.

When the desired running frequency is displayed in the LED display, press [ENTER]. This frequency and FC will alternate on the LED display. This procedure assigns the running frequency, and loads this value into memory.

If the [RUN] key is depressed at this time the drive will accelerate to this frequency. The time of acceleration will be determined by the acceleration parameters [ACC1] or [ACC2] in memory.

If the arrow keys are depressed to change frequency while the drive is running, the load will begin to accelerate or decelerate at the rate programmed for these parameters.

**TABLE 8-6: CHANGING THE FREQUENCY DURING OPERATION**

| Procedure | Operation |
|---|---|
| [△] [▽] [ENTER] | The frequency can be changed during operation by pressing the [△] key or [▽] key. This causes the operation frequency of the motor/load and the LED display to change simultaneously.<br>The operation frequency can be changed without pressing the [ENTER] key, but when the power is turned OFF, the frequency setting value will return to the value before changes were made. |

## 8.7 Error Reset

In the event that the inverter should trip, the fault relay (FL) will change state. See Part 9 or this chapter for more information about the fault relay. The inverter can be reset after a trip, by removing the cause of the trip. To reset a trip perform any of the following steps:

1. Turn off incoming power to the inverter for at least 10 seconds.

2. Provide momentary "short circuit" or jumper between terminals RST and CC.

3. Reset the drive from the STOP RESET key on the touchpad.

The touchpad key STOP RESET will clear a fault when operated as shown in Table 8-7.

**TABLE 8-7: CLEARING A FAULT WITH THE "STOP/RESET" KEY**

| Touchpad Operation | Function |
|---|---|
| STOP RESET | Hold the STOP RESET button down for approximately 1 second, until [CLr] appears on the LED display.<br><br>Momentarily depress the same key. The drive will clear and reset itself, when all trip causes and errors have been removed. |

NOTE: Some drive trip occurrences are caused by a timed overload calculation in drive software. Usually this condition is due to the motor being operated in a overcurrent condition, which may cause an unsafe level of motor heating. If this calculation determines that the motor may still be too hot to re-energize, then the drive will not reset until enough time has passed for the motor to cool down. In some cases this period can last for several minutes, preventing reset for this length of time.

If this drive/motor overload combination occurs the drive monitor LED display will continue to display the trip indication parameter, even after the reset procedure shown in Table 8-7 is implemented, until the drive software will allow a reset.

## 8.8 Warning Displays

When attempting to set a frequency parameter using the [△] and [▽] keys, it is possible to try to adjust some parameters above or below certain limiting values. If this occurs the drive will alternately display the maximum or minimum frequency available and warning indicators [HI] or [LO].

[HI] Warning: The setting value is beyond its upper limit or the current set value exceeds its upper limit by changing any parameter. If this is the case the value will "self-correct" to the maximum acceptable setting.

[LO] Warning: The setting value is beyond its lower limit or the current set value exceeds its lower limit by changing any parameter. If this is the case the value will "self-correct" to the minimum acceptable setting.

Frequency parameters that are limited by the [FH] (Maximum Frequency), [LL] (Lower Limit), or [UL] (Upper Limit) cannot be set to exceed these values. An example of this type of frequency parameter would be the multispeed run frequencies. (See Chapter 10). In some cases, the set value may be exceeded as a result of changing the [FH], [UL], and/or [LL] values. In this case, <u>if the parameter that has exceeded the range is selected</u>, a warning will be displayed, but only when this parameter is viewed, and the [△] or [▽] keys are depressed. When either of these keys is depressed the set value will change to the value in the normal range.

When higher than [UL], the same value as [UL] is set.

When lower than [LL], the same value as [LL] is set.

<u>BE SURE THE MOTOR IS NOT RUNNING DURING THE FOLLOWING PROCEDURE.</u>

As an example, hold the [△] key down, as if setting the frequency to a higher and higher value. Soon, the value of the frequency display will be equal to the [UL] setting. Then, this frequency and the [HI] warning will alternate on the LED display.

Be sure to reset the frequency to a lower value before actually starting the motor.

Other possible warning displays are:

[C]: A current more than the overcurrent stall level has been detected.

[P]: A voltage more than the overvoltage stall level has been detected.

[L]: This LED character is displayed when the overload [tHr] trip value has reached more than approximately 75% of the trip value.

## 8.9 Fault Relay Information

The VF-SX drive has an internal fault relay (FL), which indicates that the drive has tripped. The possible causes of trips are shown in Table 8-1 of this chapter. Possible solutions to trips are shown in Chapter 16. Part 7 of this chapter details the procedure to reset the drive in the event of a trip.

When the protective function operates and the inverter trips the trip cause will be shown on the LED monitor display. This is a visual confirmation of a trip. The fault relay provides electrical confirmation and indication of a tripped condition. The fault detection signal is output at the (FL) relay contact points. See Figure 8.2 below.

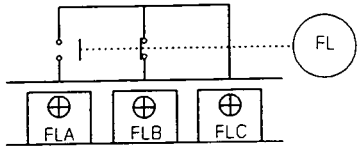


Figure 8.2 Terminals for the Fault Detection Signal

# CHAPTER 9 Fundamental Operation Parameters and Functions [Gr.F]

The functions and parameters discussed in this portion of the manual are considered the "fundamental" parameters of the Toshiba VF-SX variable speed drive. These are:

1. [FH] Maximum Frequency
2. [UL] Base Frequency
3. [Ub] Torque Boost
4. [Pt] Voltage vs. Frequency (V/f) Patterns
5. [UL] Upper Limit Frequency
6. [LL] Lower Limit Frequency
7. [Fr] Forward/Reverse Run Selection
8. [ACC1] Acceleration Time - 1
9. [dEC1] Deceleration Time - 1
10. [Pt1] Acc/Dec 1 Pattern
11. [ACC2] Acceleration Time - 2
12. [dEC2] Deceleration Time - 2
13. [Pt2] Acc/Dec 2 Pattern
14. [Ad2] Acc/Dec 1 or 2 Selection
15. [Ad2F] Frequency for Switching between Acc/Dec 1 and 2
16. [tYP] Drive Mode Selection

The Toshiba VF-SX drive has numerous built in features, operator adjustable parameters, and adjustable functions. Select and adjust these features as required to match each unique application.

Chapter 7 lists the adjustable range of all parameters and the standard factory default values of each parameter. The function and intent of each of the fundamental parameters is discussed in this chapter.

* The Drive Mode [tYP], maximum frequency [FH], and motor tone selection [CFS] (See Chapter 12) cannot be adjusted during operation. Stop the drive before attempting to adjust these parameters.

* Do not touch any of the terminal blocks or any of the circuitry inside the drive while the "CHARGE" LED indicator is illuminated. An electrical charge is maintained on the capacitor and other electrical components while this lamp is lit. Treat this condition with respect.

* Not all motors can be driven to speeds above the base frequency (50 HZ or 60 HZ) for which they are designed. The variable speed range should be limited to a safe operating range, since any general purpose motor that can be driven by the inverter is actually designed for constant speed operation. At operation above 60 HZ with a general purpose motor expect limits on bearing life, mechanical strength, vibration, noise, and other motor design variables to affect operation. In general, only apply the inverter within the guidelines shown in Table 9-1. Consult the motor manufacturer for recommendations for motor operation beyond these guidelines.

TABLE 9-1: MAXIMUM PERMISSIBLE MOTOR SPEEDS

| Motor Frame Number | Permissible Maximum Frequency (HZ) | | |
|---|---|---|---|
| | Number of Poles | | |
| | 2 | 4 | 6 |
| 42T | 60 | 120 | -- |
| 48T | | | -- |
| 56T | | | 120 |
| 140T | | | |
| 180T | | | |
| 210T | | | |

## 9.1 Setting of Voltage and Frequency Characteristics

The characteristics of the output voltage vs.the output frequency are adjustable. The standard pattern is as shown in Figure 9.1.

If necessary, adjust the Voltage/Frequency characteristics for the following special applications:

1. To operate the driven load above 80 HZ.
2. To increase startup torque.
3. To adjust for a base frequency other than 50 HZ or 60 HZ.

### 9.1.1 Maximum Frequency [FH]

The maximum frequency [FH] can be set from 30 to 240 HZ.

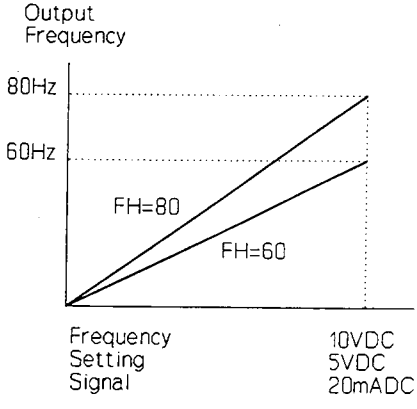


Figure 9.1 Setting the Maximum Frequency

* The maximum frequency [FH] cannot be changed during operation. Stop the inverter to adjust this parameter.

## 9.1.2 Base Frequency [uL]

Set the base frequency to 50 HZ when operating a 50 HZ rated motor. Set this parameter to 60 HZ when operating a 60 HZ design motor. The base frequency [uL] can be set between 25 HZ and 240 HZ. An example of setting the base frequency for a frequency other than 50 HZ or 60 HZ is shown in Figure 9.2.

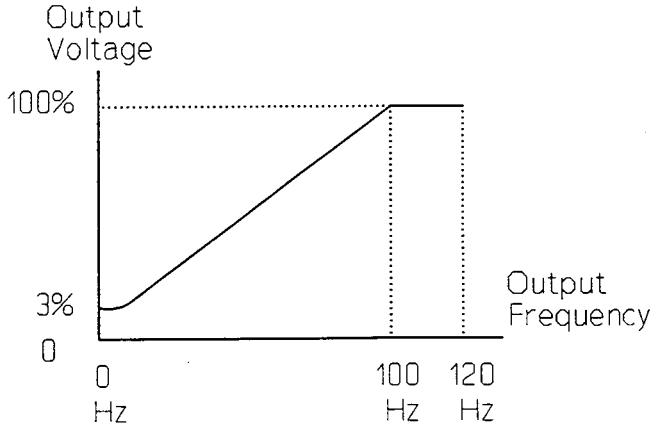


Figure 9.2 Example of Setting the Base Frequency

The procedure to change the base running frequency [uL] will be explained as an example, in the next chart.

TABLE 9-2: SAMPLE FOR CHANGING BASE RUNNING FREQUENCY

| Touchpad Operation | Display | Explanation |
|---|---|---|
| 1. PRG | 0.0<br>:Gr.U | Enter the Programming Mode from the Drive Mode. Gr.U , the first parameter group name, will be displayed. |
| 2. △ ▽ ENTER | :Gr.U<br>↓<br>:Gr.F | The Parameter Groups are selected with the arrow keys.<br>U ⟷ F ⟷ St ⟷ Pr ⟷ CC ⟷ A<br>n ⟷ U...<br>Press the ENTER key when the desired group is displayed. From here, the display will change to the parameter name display. |
| 3. △ ▽ ENTER | FH<br>↓<br>uL<br>↓<br>:60.0 | Select the parameter with the △ ▽ keys. Press the ENTER key when the desired parameter is displayed. The current value of the parameter will be displayed. |
| 4. △ ▽ ENTER | :50.0<br>:uL ⟷ 50.0<br>:ub | Change the data with the △ ▽ keys. Press the ENTER key when the desired data is displayed. The data will be changed and stored. After the parameter name and data are displayed in order, the next parameter in the parameter group will be shown. |

ENTER Return to the data in part 3, above. The next parameter is displayed. OR

PRG Return to the Drive Mode. OR

MON Enter the Monitor Mode. OR

△ ▽ Return to the parameter selection in part 3, above.

Other modes can be accessed at any time by pressing [MON] or [PRG] at any time in the sequence above, but if the [ENTER] key is not pressed the data changed in the above sequence is not stored in memory. If power is then turned OFF the parameter will return to the former setting. ALWAYS press the [ENTER] key to store a new setting in memory.

## 9.1.3 Torque Boost [ub]

Adjust the torque boost to increase the startup torque. The torque boost value [ub] can be set from 0% to 30% of the rated output voltage.

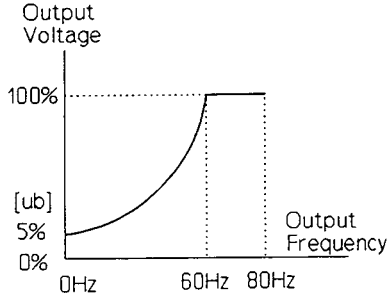


Figure 9.3 Setting to Increase Start-up Torque

* Note that an overcurrent trip may occur at startup if the torque boost value is set too high.

## 9.1.4 V/f Patterns [Pt]

The V/f characteristic may be set for constant torque loads, resulting in a linear relationship between output voltage and frequency. There is a separate setting for variable torque loads which sometimes results in energy savings, if the application is suitable for this V/f pattern. Fans and centrifugal pumps are the most common types of loads associated with the variable torque load V/f pattern. See Figures 9.4 and 9.5.

**TABLE 9-3: SELECTION OF CONSTANT OR VARIABLE TORQUE V/f PATTERNS**

| [Pt] Value | Function |
|---|---|
| 0 | For constant torque characteristics. |
| 1 | For variable torque characteristics (Energy saving operation is possible. Motor noise may also be decreased.) |

Pt-0: Constant Torque Characteristics

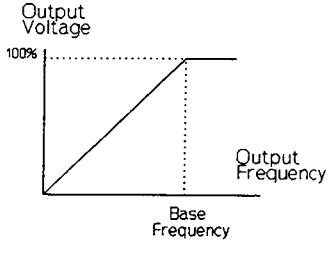


Figure 9.4 Constant Torque V/f Curve

Pt-1: Variable Torque Characteristics

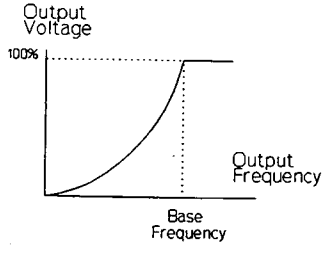


Figure 9.5 Variable Torque V/f Curve

## 9.2 Upper Limit Frequency and Lower Limit Frequency [UL, LL]

The "upper limit frequency" [UL] determines the maximum frequency the drive will allow the motor to run. The "lower limit frequency" [LL] determines the minimum frequency the drive will allow the motor to run. Both of these values are adjustable.

The upper limit frequency can be set between 0 and the maximum frequency.

The lower limit frequency can be set between 0 and the upper limit frequency.

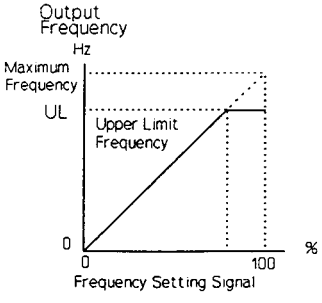


Figure 9.6 Upper Limit Frequencies

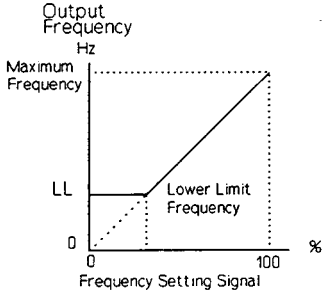


Figure 9.7 Lower Limit Frequencies

NOTE: The operation frequencies set from the touchpad can only be set within the upper limit frequency and lower limit frequency range. An error indication (for instance, [HI ⟷ 80.0]) will occur when the operation frequency is set outside the limits of the upper limit frequency.

## 9.3 Forward and Reverse Run [F, r]

"Forward run" and "reverse run" are each possible from panel control or from remote control via external signals.

TABLE 9-4: SELECTION OF FORWARD OR REVERSE RUN OPERATION

| [Fr] Value | Function |
|---|---|
| 0 | Reverse Run |
| 1 | Forward Run |

### 9.3.1 Operation from the Touchpad

Confirm that the "PANEL CONTROL" LED is on before attempting touchpad operation.

**Forward and Reverse Run**

A. Select Forward Run or Reverse Run from the menu. This selection can be changed during running.

B. When the drive is in "PANEL" control mode, the motor will run when the [RUN] key is depressed. The "PANEL CONTROL" lamp will flicker when the motor is running. The motor will decelerate and stop when the [STOP RESET] key is pressed.

## 9.3.2 Operation Using External Signals

**FORWARD RUN AND REVERSE RUN:**

These operations are available using remote signals, as well as from the touchpad. To perform these operations using remote signals, wire the correct drive input terminal blocks as shown in Figure 9.8.

1. Forward run and reverse run are possible when either F or R is ON and ST is shorted to CC. If the signal from F-CC or R-CC is opened the drive will decelerate to stop, based on the deceleration parameters [dEC1] or [dEC2]. Coasting stop is NOT available if ST is shorted to CC. Remove the factory installed jumper between terminals ST and CC if coasting stop is preferred over decelerating stop. Simplified wiring for this procedure is shown in Chapter 6, Figure 6.2.

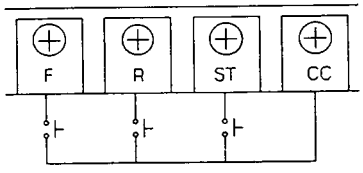


Figure 9.8 Installation of Forward/Reverse Contacts

2. Install the switches as shown in Figure 9.8.

3. Input the frequency setting signal to the correct terminals.

**TABLE 9-5. FORWARD/REVERSE TERMINAL INPUT AND OPERATION**

| Terminal | | | Operation |
|---|---|---|---|
| ST-CC | F-CC | R-CC | |
| OFF | ON/OFF | ON/OFF | Output OFF, Coasting Stop |
| ON | OFF | OFF | Stop |
| ON | OFF | ON | Reverse Run |
| ON | ON | OFF | Forward Run |
| ON | ON | ON | Reverse Run |

Use the following procedures to operate the drive by using remote signals on these terminals. See Figure 9.9 below for an example of using contacts on the ST, F, and R terminals to initiate forward and reverse run.

1. Confirm that the "PANEL CONTROL" lamp is not on. If necessary, turn OFF the "PANEL CONTROL" lamp by pressing the [PANEL/REMOTE] key.
2. Turn the ST-CC switch to ON.
3. The monitor display will turn from [OFF] to [0.0].
4. Turn the F-CC switch ON.
5. "Forward run" will be activated as shown in Figure 9.9, (a)
6. The motor will "reverse run" in Figure 9.9, (b) if both the F-CC switch and R-CC switch are ON.
7. The motor will "reverse run" in Figure 9.9, (c).
8. When the ST-CC switch is turned OFF, the motor will "coast to stop" as shown in Figure 9.9, (d).
9. "Coasting stop" will be activated when an input power switch or MCCB is turned OFF with the ST switch and F switch both ON. However, DO NOT turn off the drive under load to initiate coasting stop except during an emergency.

The procedure above details operation for Acceleration/Deceleration 1 operation. For operation of Acceleration/Deceleration 2, short AD2-CC.

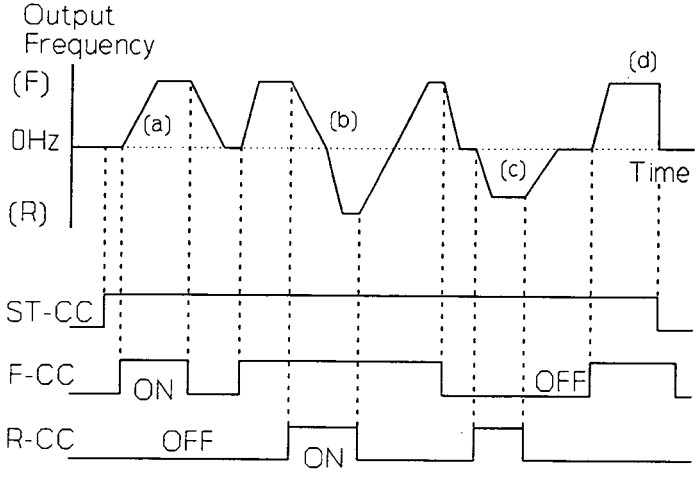


Figure 9.9 Example of Forward/Reverse Run

## 9.4 Acceleration and Deceleration

These settings adjust the time to accelerate from "stopped" to the frequency defined by [FH], and to decelerate from [FH] to "stopped". There are also several adjustment options for the pattern of acceleration and deceleration. See the examples below.

### 9.4.1 Acceleration and Deceleration Time [ACC1, dEC1, ACC2, dEC2]

The acceleration and deceleration times 1 and 2 can be set from 0.1 to 3600 seconds each. All four of these settings are independently adjustable from one another.

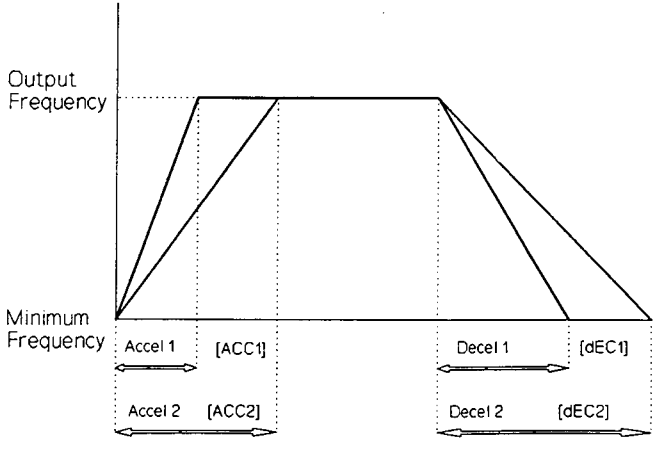


Figure 9.10 Acceleration/Deceleration Time

## 9.4.2 Acceleration/Deceleration Pattern [Pt1, Pt2]

The acceleration/deceleration pattern [Pt1], [Pt2] corresponding to acceleration/deceleration times 1 and 2 are selected as shown.

**TABLE 9-6: SELECTION OF ACCELERATION/DECELERATION PATTERNS**

| [Pt1] and [Pt2] Values | Function |
|---|---|
| 0 | Straight line pattern. See Figure 9.11. |
| 1 | S-Character 1 Pattern (The motor acceleration torque gradually accelerates at a small speed in this pattern. This pattern is suitable for transfer machines.) See Figure 9.12. |
| 2 | S-Character 2 Pattern (The motor acceleration torque gradually accelerates at a small speed in this pattern. This pattern is suitable for high speed operation.) See Figure 9.13. |

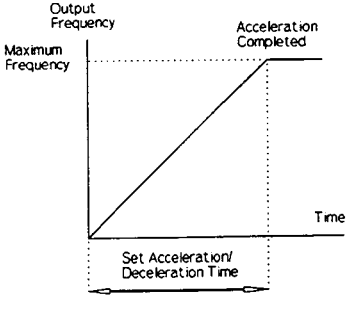


Figure 9.11 Straight Line Pattern

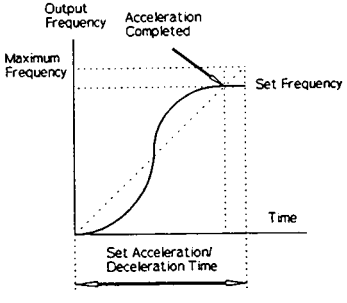


Figure 9.12 "S" Character 1 Pattern

NOTE: The S-Character 2 pattern is based on the maximum frequency.

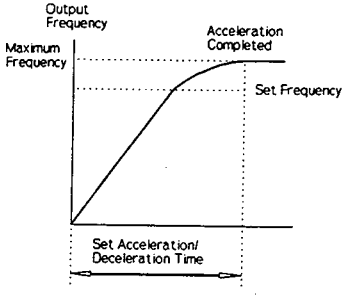


Figure 9.13 "S" Character 2 Pattern

Note 1: As an example, three different deceleration pattern options for when the S-Character 1 pattern is set is shown in Figures 9.14, 9.15, and 9.16.

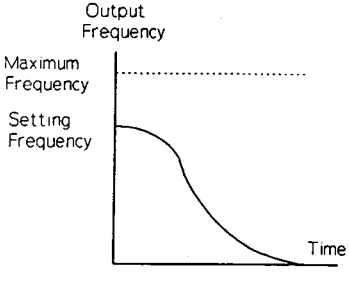


Figure 9.14 Pattern for OFF Command

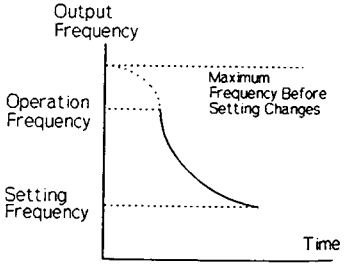


Figure 9.15 Pattern for Frequency Change

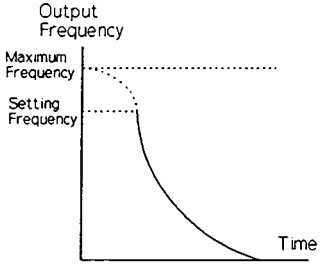


Figure 9.16 Pattern for Forward/Reverse Changeover

## 9.4.3 Selection of Acceleration/Deceleration 1 and 2 [Ad2, Ad2F]

1. Selection of Acceleration/Deceleration 1 and 2 during operation by using external control signals:

The acceleration/deceleration time 1 and 2 can be selected from control terminal input AD2 in conjunction with the proper adjustment of parameter [Ad2]. See Table 9-7 below.

TABLE 9-7: SELECTION OF ACCELERATION/DECELERATION SETTINGS 1 OR 2

| AD2-CC | Parameter [Ad2] | Function |
|---|---|---|
| Open | 0 | Select ACC1, dEC1. |
| | 1 | Select ACC2, dEC2. |
| | 2 | Select ACC1, dEC1 when under the Ad2F frequency.<br>Select ACC2, dEC2 when over the Ad2F frequency. |
| Shorted | 0 | Select ACC2, dEC2. |
| | 1 | Select ACC1, dEC1. |
| | 2 | Select ACC2, dEC2 when under the Ad2F frequency.<br>Select ACC1, dEC1 when over the Ad2F frequency. |

2. Automatic changeover of the acceleration/deceleration time.

By using a combination of input control terminal AD2 and parameters [Ad2] and [Ad2F] the acceleration/deceleration time can be easily changed automatically, when [Ad2] = 2. An example of automatic changeover of the acceleration/deceleration time is shown in Figure 9.12.

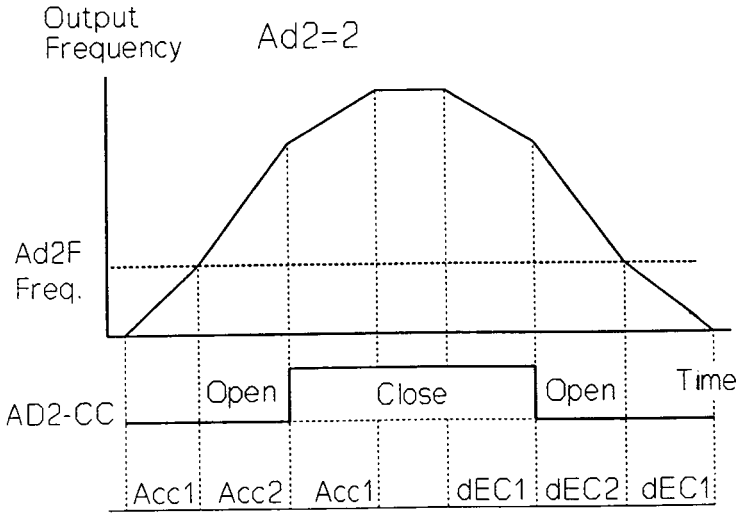


Figure 9.12 Automatic Changeover of Acceleration/Deceleration Time

## 9.5 Setting of Standard Parameter Groups [tYP]

Certain standard parameter groups can be set automatically by the use of the [tYP] function. In addition, the drive can be reset to all the standard factory settings via the same command. These standard settings can only be changed when the drive is not running. The procedure for entering these settings into memory is shown below.

NOTE: When [tYP] is set to 1 or 2 only the maximum frequency [FH], base frequency [UL], upper limit frequency [UL], and point 2 output frequency [F-P2] will be changed.

TABLE 9-8: SETTING OF STANDARD PARAMETER GROUPS

| Keystrokes | LED Display | Operation |
|---|---|---|
| PRG | 0.0<br>: Gr.U | The programming mode is activated from the drive mode.<br>The head group name Gr.U is displayed. |
| △ ▽<br>ENTER | Gr.U<br>↓<br>Gr.F | Select the desired parameter group with the △ ▽ keys.<br>U ⟷ F ⟷ St ⟷ Pr ⟷ CC ⟷ An ⟷ U Press the ENTER key when the desired group is displayed. The status will move to the parameter name display. |
| △ ▽<br>ENTER | :FH<br>↓<br>:tYP<br>↓<br>:0 | Select the parameter number with the △ ▽ keys. Press the ENTER key when the desired parameter is displayed. 0 will be displayed regardless of the present setting. |
| △ ▽<br>ENTER | :3<br><br>InIt | Change the data with the △ ▽ keys.<br>1. Standard setting for 50 Hz base frequency.<br>2. Standard setting for 60 Hz base frequency.<br>3. Standard default setting; all parameters will return to the standard default factory settings.<br>4. Clear trip; all past trip data is erased.<br>Press the ENTER key when the desired number above is displayed. InIt is briefly displayed, and the drive returns to the drive mode. |

Figure 9.13 below shows the Volts/Hertz pattern for the [tYP] setting equal to 1 or 2. Figure 9.14 below shows the Volts/Hertz pattern when [tYP] equals 3, the standard default setting for the VF-SX drive.

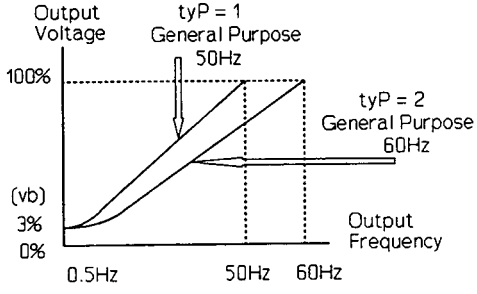


**Figure 9.13 General Purpose 50 Hz and 60 Hz V/f Curves**

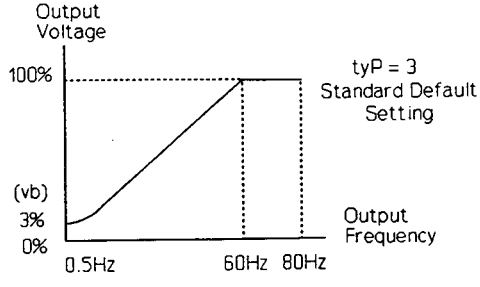


**Figure 9.14 V/f Curve for Standard Default Setting**

# Chapter 10 Terminal Selection Parameters [Gr.St]

This section of the manual describes the functions which the control terminals can perform. These terminals are used to send output signals about the condition in which the drive is operating, and to accept remote signals for automatic operation. The methods of disabling and enabling many different features of the inverter are also described. The methods for assigning and programming the control terminals are discussed, and examples are given of uses for the control terminals. The terminals, functions and parameters discussed in this chapter are shown below.

1. [CMOd] Command Mode Selection
2. [FMOd] Frequency Setting Mode Selection
3. [PMOd] Parameter Setting Disable Selection
4. [Itb] Input Terminal Selection
5. [Otb] Output Terminal Selection
6. [LF] Low-speed Signal Output Frequency
7. [LFHL] Low-speed Signal Logic Selection
8. [FrCH] Speed Reached Specifying Frequency
9. [rCH] Speed Reached Selection
10. [rrCH] Speed Reached Detection Range
11. Frequency Setting via Remote Signals:
    - 11a. [IuIn] Terminal IV Input
    - 11b. [PI, F-PI, P2, F-P2] Setting Signals and Frequencies
    - 11c. [rrCC] RR Terminal Input Prioritization
12. Jogging via Remote Signals
    - 12a. [JOG] Jogging Run Frequency
    - 12b. [JStP] Jogging Stop Pattern
13. [Sr.M] Multispeed Run
14. [Sr1 -- Sr7] Multiple Speed Operation Frequencies

## 10.1 Command Mode Selection [CMOd]

The panel control mode (touchpad) and remote control mode are the two options available to control the drive.

* When using the remote control mode the commands from the touchpad are ignored.
* When using the touchpad control mode all remote commands at terminal blocks are ignored.

TABLE 10-1: SELECTION OF TOUCHPAD CONTROL OR REMOTE CONTROL PARAMETERS

| [CMOd] Value | Function |
|---|---|
| 0 | No input is enabled. |
| 1 | Only terminal input at control blocks is valid. |
| 2 | Only touchpad input is valid. |
| 3 | Terminal or touchpad input is valid. |

## 10.2 Frequency Setting Commands [FMOd]

While in the drive mode, the frequency that the drive sends to the motor may be changed with the [△] or [▽] key. Many varieties of remote control signals may also determine the running frequency of the motor. These include potentiometers, 4-20 mADC signals, 0-5 VDC signals, 0-10 VDC signals, and similar control signals. Limitations can be placed on frequency setting and changing signals as shown in Table 10-2.

TABLE 10-2: RUNNING FREQUENCY INPUT PARAMETERS

| [FMOd] Value | Function |
|---|---|
| 0 | No input is enabled. |
| 1 | Only terminal input at control blocks is valid. |
| 2 | Only touchpad control is valid. |
| 3 | Terminal or touchpad input is valid. |

## 10.3 Parameter Setting Disable Function [PMOd]

The drive parameters can be changed as explained in other chapters, but these parameters can only be changed if the *Parameter Setting Disable Selection* is enabled, in Table 10-3. This parameter can potentially be used for increased drive security. Once customized parameter settings are programmed and the *Parameter Setting Disable Function* is disabled none of the parameters may be revised, including all parameters still set at the factory default settings. Parameters can still be viewed by scrolling through the parameter tables.

TABLE 10-3: PARAMETER SETTING DISABLE OPTIONS

| [PNOd] Value | Function |
|---|---|
| 0 | Setting disabled. |
| 1 | Setting enabled. |

**CAUTION:**

The *Parameter Group Disable Selection* can be changed from the *Terminal Selection Parameter Group* [Gr.St]. It CAN ALSO be changed from the *User Parameter Group* [Gr.U]. Once this value has been changed FROM EITHER GROUP MENU all other parameters can then be changed.

## 10.3.1 Security Considerations and Parameter [PNOd]

For users interested in security and protection of customer parameters, this parameter [PNOd], will prevent any unauthorized changes in any of the parameters, when [PNOd] is set to 0. If this parameter is set to 0 none of the other drive parameters can be changed. This is the only parameter that can be changed when the *Parameter Setting Disable Function* is set to 0.

## 10.4 Input Terminal Selection [Itb]

The functions of input terminals SS1, SS2/JOG, and SS3,EX can be selected as shown in Table 10-4, to achieve a variety of input functions.

TABLE 10-4: INPUT TERMINAL SELECTION OPTIONS

| [Itb] Value | Function |
|---|---|
| 0 | SS2, SS3 (for 7-speed jog) |
| 1 | JOG, SS3 (for jogging and 3-speed run) |
| 2 | SS2, EX (for 3-speed run and external emergency stop) |
| 3 | JOG, EX (for jogging run and external emergency stop) |

The ON and OFF conditions of SS1, SS2/JOG, and SS3/EX switches and the selected operation frequencies are as shown in Table 10-5.

**TABLE 10-5: INPUT TERMINAL SELECTION TABLE**

| Input Terminal Selection | Terminal | | | Selected Operation Frequency |
|---|---|---|---|---|
| | SS3/EX | SS2/JOG | SS1 | |
| 0 : SS2 SS3 | OFF | OFF | OFF | Operating frequency set by terminal |
| | OFF | OFF | ON | 1st speed run operation frequency |
| | OFF | ON | OFF | 2nd speed run operation frequency |
| | OFF | ON | ON | 3rd speed run operation frequency |
| | ON | OFF | OFF | 4th speed run operation frequency |
| | ON | OFF | ON | 5th speed run operation frequency |
| | ON | ON | OFF | 6th speed run operation frequency |
| | ON | ON | ON | 7th speed run operation frequency |
| | | | | |
| 1 : JOG SS3 | OFF | OFF | OFF | Operating frequency set by terminal |
| | ON/OFF | ON | ON/OFF | Jogging run operation frequency |
| | ON | OFF | ON | 1st speed run operation frequency |
| | ON | OFF | OFF | 2nd speed run operation frequency |
| | ON | OFF | ON | 3rd speed run operation frequency |
| | | | | |
| 2 : SS2 EX | OFF | OFF | OFF | Operating frequency set by terminal |
| | OFF | OFF | ON | 1st speed run operation frequency |
| | OFF | ON | OFF | 2nd speed run operation frequency |
| | OFF | ON | ON | 3rd speed run operation frequency |
| | ON | ON/OFF | ON/OFF | Emergency stop |
| | | | | |
| 3 : JOG EX | OFF | OFF | OFF | Operating frequency set by terminal |
| | OFF | ON | ON/OFF | Jogging run frequency |
| | OFF | OFF | ON | 1st speed run operation frequency |
| | ON | ON/OFF | ON/OFF | Emergency stop |

## 10.5 Output Terminal Selection [Obb]

The function of the "frequency reached" signal output terminals RCH (UL) and LOW (LL) can be selected as indicated in Table 10-6 below.

**TABLE 10-6: OUTPUT TERMINAL SELECTION OPTIONS**

| [Obb] Value | Function |
|---|---|
| 0 | LL, UL (lower limit/upper limit frequency signal) |
| 1 | LOW, UL (low speed signal and upper limit frequency signal) |
| 2 | LL, RCH (lower limit frequency and speed reached signal) |
| 3 | LOW, RCH (low speed signal and speed reached signal) |

When the assigned frequency is reached during operation, the reached signal is enabled at the output terminal RCH (UL) and LOW (LL). The output signal is an "open collector output" (24 VDC, 50 mADC, maximum). The control side receives the signals from a relay, programmable controller with 24 VDC input, or similar input device.

The "speed reached signal connection" example using a relay is shown in Figure 10.1. The "speed reached signal connection" example using a programmable controller is shown in Figure 10.2. Toshiba strongly recommends the use of a surge absorption device (SA) around the coil of external output relays.

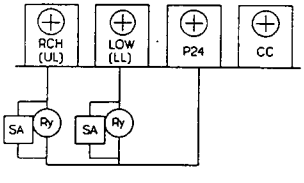


Figure 10.1 Example of a Speed-Reached Signal with External Relay

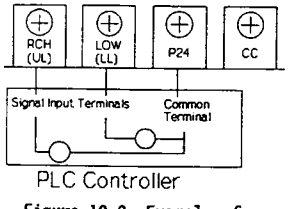


Figure 10.2 Example of a Speed-Reached Signal with a Programmable Logic Controller

* The "speed reached" signal does not have a hysteresis so the reached signal may cycle ON and OFF if the output frequency fluctuates near the reached frequency. In this case adjust the speed reached detection with the [rrCH] function. See Section 10.7.2 in this chapter.

## 10.6 Low Speed Signal Output and Speed Reached Signal Output [LF, LFHL, FrCH, rCH, rrCH]

These functions allow the drive to signal when certain output frequencies, parameters, or conditions have been reached or exceeded. When the output frequency reaches the preset low speed during operation and when the output frequency reaches the set frequency, the "reached" signal will enabled.

### 10.6.1 Low Speed Signal Output Frequency [LF] and Speed Reached Logic Signal [LFHL]

The low speed signal output frequency [LF] can be set between 0 Hz and the maximum frequency. The signal output can also be selected logically. Implement this feature with the parameter [LFHL].

This [LFHL] signal is an open collector transistor used to send a signal to a remote device, defining the status of low speed, as shown below.

TABLE 10-7: DEFINITIONS OF OPEN COLLECTOR TRANSISTOR OUTPUT FOR LOW SPEED SIGNAL

| [LFHL] Value | Function |
|---|---|
| 0 | Open collector transistor output OFF when under low speed signal output frequency. [LF] |
| 1 | Open collector transistor output ON when under low speed signal output frequency. [LF] |

### 10.6.2 Speed Reached Signal Output [rCH]

The speed reach specifying frequency can be set in parameter [FrCH] and the speed reached conditions are set in parameter [rCH].

TABLE 10-8: DEFINITIONS OF TRANSISTOR OUTPUT FOR SPEED REACHED SIGNAL

| [rCH] Value | Function |
|---|---|
| 0 | Open collector transistor output ON when acceleration/deceleration is completed. |
| 1 | Open collector transistor output ON when specified frequency [FrCH] is reached. |

The speed reached detection range [rrCH] can be set between 0 Hz and the maximum frequency, with a tolerance of 0.1 HZ.

The speed reached set frequency [FrCH] can be set between 0 Hz and the maximum frequency.

An example of these parameters is shown in Figure 10.3

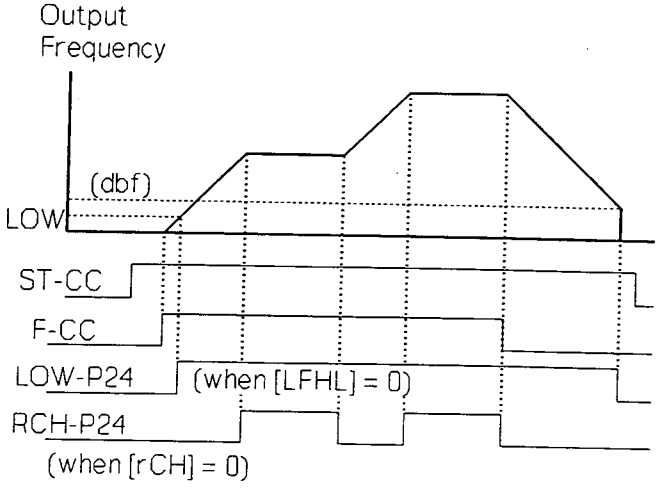


Figure 10.3 Examples of Low Speed Signal Operation and Speed-Reached Signal Operation

* The "speed reached" signal is also output when any of the seven "multispeed" frequencies is reached. See Section 10.10 of this chapter.

* The low speed signal will turn OFF when a DC injection braking signal is applied during decelerating stop.

## 10.7 Frequency Setting via Remote Control Signals

This portion of the manual describes how to run the drive at various user assigned frequencies, which are determined by the use of external control signals. The touchpad is not used for this operation, other than the initial assignment of values and programming instructions.

After this programming is completed the drive may be run automatically. It may be desirable, from a security standpoint, to disable the touchpad when programming is completed, so that custom parameters and programming cannot be changed or revised. See this chapter for details. (Parameters [CMOd], [FMOd], and [PMOd]).

The output frequency is controlled externally using terminals PP, RR, IV, and CC on the control circuit terminal blocks shown in Figure 10.4.

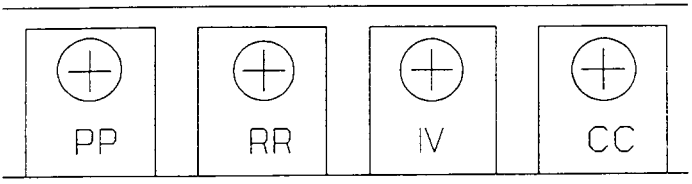


Figure 10.4 Input Contacts for Speed Reference Signals

## 10.7.1 Types of Frequency Setting Signals

The frequency setting signals are changed using Jumpers J1 and J2 on the control printed circuit board. The jumper positions, combinations of parameters, and the function of these parameters is shown in Tables 10-9A, B, and C. The physical location of jumpers J1 and J2 (located inside each drive) is shown in Chapter 6.

TABLE 10-9A: ASSIGNMENT OF JUMPER J1 AND J2; J1 = 10 VOLTS

| RR Terminal Input | IV Terminal Input | J1 | J2 | rrCC | IuIn | Function |
|---|---|---|---|---|---|---|
| | Not Used | 10 V | I or V | 0 or 1 | 0 | Runs with RR terminal input (0-10V) |
| | | | | | 1 | Always set IV terminal input to 0 when parameter IuIn.1 |
| | 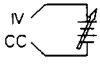 | | V | 0 | 1 | Runs with IV terminal input (0-5V)<br>Runs with RR terminal input (0-10V when IV terminal input = 0 |
| | | | | 1 | | Runs with RR terminal input (0-10V)<br>Runs with RR terminal input (0-5V) when IV terminal input is 0 |
| | 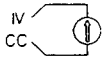 | | I | 0 | 1 | Runs with IV terminal input (0-10V)<br>Runs with RR terminal input (0-10V) when IV terminal input is 0 |
| | | | | 1 | | Runs with RR terminal input (0-10V)<br>Runs with IV terminal input (4-20mA or 0-20mA) when RR terminal input = 0 |

TABLE 10-9B: ASSIGNMENT OF J1 AND J2; J1 = 5 VOLTS

| RR Terminal Input | IV Terminal Input | J1 | J2 | rrCH | IuIn | Function |
|---|---|---|---|---|---|---|
| RR CC 0-5V | Not Used | 5V | I or V | 0 or 1 | 0 | Runs with RR Terminal input (0-5V) |
| | | | | | 1 | Always set IV terminal input to 0 when IuIn.1 |
| | IV CC 0-5V | | V | 0 | 1 | Runs with IV terminal input (0-5V)<br>Runs with RR terminal input (0-5V) when IV terminal input is 0. |
| | | | | 1 | | Runs with IV terminal input (4-20mA)<br>Runs with IV terminal input (0-5V) when IV terminal input is 0. |
| | IV CC 4-20mA or 0-20mA | | I | 0 | 1 | Runs with IV terminal input (4-20mA)<br>Runs with RR terminal input (0-5V) when IV terminal input is 0. |
| | | | | 1 | | Runs with RR terminal input (0-5V)<br>Runs with IV terminal input (4-20mA) when RR terminal input is 0. |

TABLE 10-9C: ASSIGNMENT OF J1 AND J2; RR INPUT TERMINAL NOT USED

| RR Terminal Input | IV Terminal Input | J1 | J2 | rrCH | IuIn | Function |
|---|---|---|---|---|---|---|
| Not Used | IV CC 0-5V | 10V or 5V | V | 0 | 1 | Runs with IV terminal input (0-5V) |
| | | | | 1 | | Always set RR terminal input to 0 when rrCH.1 |
| | IV CC 4-20mA or 0-20mA | | I | 0 | 0 | Runs with IV terminal input (4-20mA or 0-20mA) |
| | | | | 1 | | Always set RR terminal input to 0 when rrCC.1 |

## 10.7.2 RR Terminal Input Priority [rrCC], [IuIn]

The frequency setting signals input from the terminal blocks can be changed and prioritized as shown in Table 10-10.

**TABLE 10-10: RR TERMINAL INPUT PRIORITY**

| [rrCC] Value | [IuIn] Value | Function |
|---|---|---|
| 0 | 0 | Only RR terminal is valid. |
| 0 | 1 | IV terminal prioritized (combination with RR terminal). |
| 1 | 0 | Only RR terminal is valid. |
| 1 | 1 | RR terminal prioritized (combination with IV terminal). |

## 10.8 Frequency Setting Signals [PI], [F-PI] and [P2], [F-P2]

### 1. RR Terminal Frequency Setting Signal Characteristics

The characteristics of the frequency signals input to the RR terminal, and the resulting output frequency to the motor are as shown in Figure 10.5.

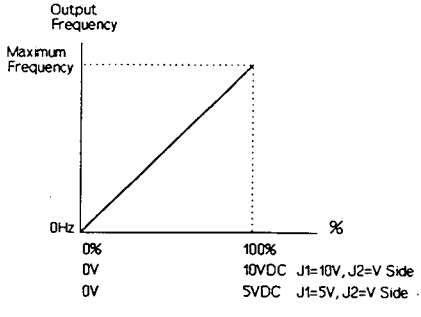


Figure 10.5 Frequency Setting Signal Characteristics (RR Terminal)

See Chapter 13, Part 2, and Figure 13.4 for an explanation of how changing the gain and bias parameters affects the setting of the frequency setting signals.

**2. IV Terminal Frequency Setting Signal Characteristics**

The characteristics of the frequency setting signals and output frequencies input to the IV terminal can be set by setting parameter [ IUIn] to I (enabled). The characteristics are set with two points.

* The point setting signal [P I ] can be set between 0% and 100%.
* The point 1 output frequency [F-P I ] can be set between 0 and the maximum frequency.
* The point 2 setting signal [P 2] can be set between 0% and 100%.
* The point 2 output frequency [F-P 2] can be set between 0 and the maximum frequency.

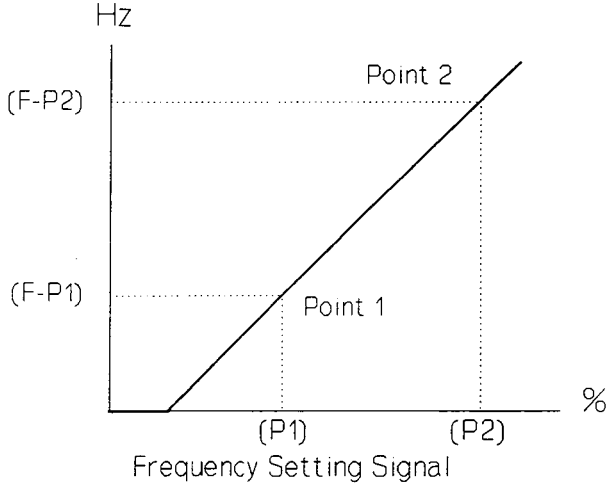


**Figure 10.6 Frequency Setting Signal Characteristics of the IV Terminal**

The following example shows a setting to use a 0 - 50 Hz output frequency characteristic for a 4-20mA input signal. This can be set by selecting "1" in the drive mode.

| | |
|---|---|
| Input signal point 1 [P1] | 20% |
| Point 1 output frequency [F-P1] | 0 HZ |
| Input signal point 2 [P2] | 100% |
| Point 2 output frequency [F-P2] | 50 HZ |

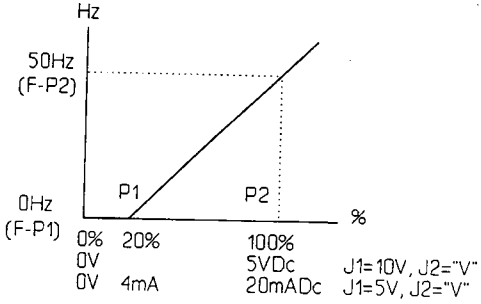


Figure 10.7 Frequency Setting Signal Characteristics at 50 Hz

* Separate point 1 and 2 by at least 10%. The [Err.1] diagnostic will illuminate on the LED display when point 1 and point 2 are not separated by at least 10%.

## 10.9 Jogging Run via Remote Control [JOG], [JSTP]

The jogging run feature is used to operate the motor slowly, or for very brief intervals. When the jogging run signal is received at terminal "JOG" the jogging run frequency will be output immediately regardless of the set acceleration time.

The jogging run frequency [JOG] can be set between 0 and 20 HZ. When the jogging run frequency is set to a value other than 0, selection of the jogging stop pattern [JSTP] is enabled. See Table 10-11 for stopping options when the JOG feature is enabled.

**TABLE 10-11: JOG RUN: STOPPING OPTIONS AVAILABLE**

| [JStP] Value | Function |
|---|---|
| 0 | Decelerating stop (decelerating stop according to the deceleration pattern set in [dECI]. |
| 1 | Coasting stop. |
| 2 | DC injection braking stop (drive stops according to the DC injection braking pattern set in [dbF], [dbU], and [dbt]. |

To operate the [JOG] function:

1. Connect the "JOG" switch between the "JOG" and "CC" terminals on the control circuit terminal block as shown in Figure 10.8.

2. Confirm with the touchpad that the input terminal selection [Itb] is set to 2 or 3. (The standard default setting is 0).

3. Confirm that the "PANEL CONTROL" lamp is not lit. (Turn the "PANEL CONTROL" lamp OFF by pressing the PANEL/REMOTE key).

4. Turn the "JOG" switch ON and the motor will rotate at the jogging run frequency while a signal at the "F" switch or "R" switch is ON.

**TABLE 10-12: JOG TERMINAL INPUT AND OPERATION**

| Terminal | | | | Operation |
|---|---|---|---|---|
| F | R | ST | JOG | |
| OFF | OFF | ON | ON | Jogging Stop |
| OFF | ON | ON | ON | Reverse Jogging Run |
| ON | OFF | ON | ON | Forward Jogging Run |
| ON | ON | OFF | ON | Reverse Jogging Run |

Figure 10.8 below shows and example of the use of a remote "JOG" switch connected to the "JOG" terminal to perform the [JOG] function by remote control. Figure 10.9 shows an example of a typical output to a motor, where:

(a): Forward JOG run.
(b): Reverse JOG run.
(c): When the operation frequency is set from the terminal during jogging run, a test run will be carried out with the set frequency when JOG-CC is opened.

NOTE: Jogging Run will NOT be carried out even when the "JOG" Switch is turned ON during operation, when the run frequency is set from the touchpad.

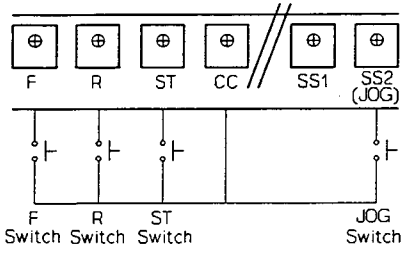


Figure 10.8 Connection of JOG Switch

* The "JOG" switch function as the jog mode selector. Perform jogging run by energizing the "F" or "R" switch.

An example of Forward Jog and Reverse Jog is shown in Figure 10.9.

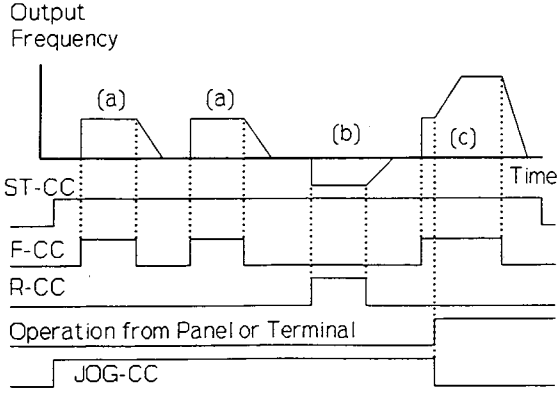


Figure 10.9 Example of Operation with JOG Switch

## 10.10 Multiple Speed Run [Sr.n], [Sr1 -- Sr7]

7 Speed running is possible. (8 Speed run is possible when the operation frequency is included.)

First, set the parameter [Sr.n] to 1 (multiple speed run enabled). When this parameter is enabled each speed [Sr1 -- Sr7] can be set between the lower limit frequency [LL] and the upper limit frequency [UL]. Operation using this procedure is not available from the touchpad.

Wire the designated terminals in the following manner:

1. Connect the "SS1", "SS2", and "SS3" switches between the SS1, SS2, SS3, and CC terminal blocks on the control circuit terminal block respectively as shown in Figure 10.10.

2. Confirm with the touchpad that the input terminal selection [1tb] is set to 0. (Standard default value is 0).

3. Confirm that the "PANEL CONTROL" lamp is not lit. (Turn the "PANEL CONTROL" lamp OFF by pressing the PANEL/REMOTE key.)

4. Multispeed run is possible by turning the SS1, SS2, and SS3 switches ON and OFF, per Table 10-13 below.

**TABLE 10-13: MULTISPEED RUN TERMINAL DESIGNATIONS**

| SS1 - CC | SS2 - CC | SS3 - CC | Selected Operation Frequency |
|---|---|---|---|
| OFF | OFF | OFF | Operation frequency set from terminal. |
| ON | OFF | OFF | 1st speed run operation frequency. |
| OFF | ON | OFF | 2nd speed run operation frequency. |
| ON | ON | OFF | 3rd speed run operation frequency. |
| OFF | OFF | ON | 4th speed run operation frequency. |
| ON | OFF | ON | 5th speed run operation frequency. |
| OFF | ON | ON | 6th speed run operation frequency. |
| ON | ON | ON | 7th speed run operation frequency. |

An example of wiring to the VF-SX drive multi-speed input terminal blocks is shown in Figure 10.10.

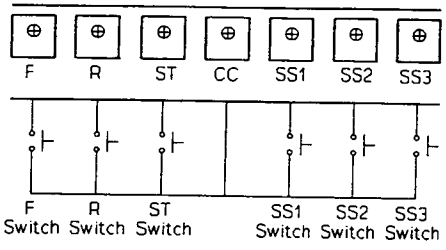


**Figure 10.10 Connection of the Terminals for Multispeed Run Signals**

**An example of multispeed run is shown in Figure 10.11**

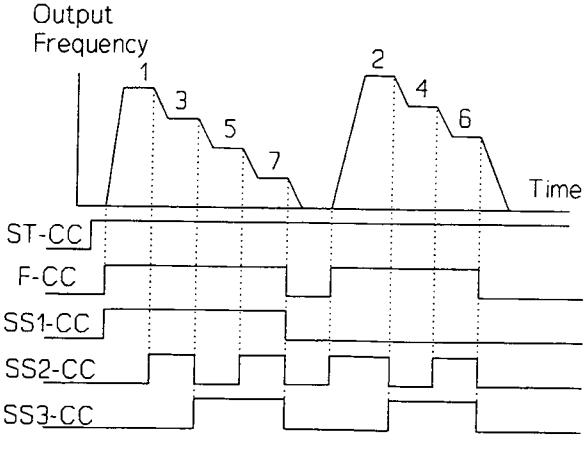


**Figure 10.11 Example of Multispeed Run (7-Speed)**

In Figure 10.11 above the 7 preset speed are represented as follows:

Sr1 = 1.

Sr2 = 2.

Sr3 = 3.

Sr4 = 4.

Sr5 = 5.

Sr6 = 6.

Sr7 = 7.

# Chapter 11 Protection Parameters [Gr.Pr]

This portion of the manual describes the different types of protective parameters, functions, and settings available on the Toshiba VF-SX drive. These parameters are listed below.

1. [Pb] Regenerative Discharge Braking Resistor
2. [OPSS] Overvoltage Limiting Action Selection
3. [dbF] DC Injection Braking Start-up Frequency
4. [dbU] DC Injection Braking Voltage
5. [dbt] DC Injection Braking Time
6. [ESTP] Emergency Stop
7. [Edbt] Emergency DC Injection Braking Stop Control Time
8. [rtry] Retry Selection
9. [UUC] Power Control Function Selection
10. [tHr] Electronic Thermal Protective Level
11. [StL] Stall Prevention Function Activation Level
12. [OLn] Electronic Thermal Protection Characteristic Selection
13. [trCL] Trip Retention Selection

## 11.1 Regenerative Discharge Braking Selection [Pb] and Overvoltage Limiting Action Selection [OPSS]

The regenerative discharge brake can be selected to prevent overvoltage trips which occur due to rapid deceleration or rapid deceleration to stop.

Use the standard braking resistor for the following conditions:

1. SX drive is rated 1/2 HP -- 5 HP
2. Regenerative braking time is 5 seconds or less (during each stop).
3. Usage rate (duty cycle) is 3% of running time, or less.

See Chapter 15 for the standard ratings of discharge resistors.

The resistor can become very hot during high cycle operations, or when long deceleration times keep a large load on the resistor. Take care when installing the external resistor. Do NOT mount it on a combustible base material. In general, keep it away from any combustible material, and provide adequate room for air flow to help cool the device.

If a fault occurs due to an abnormally high power voltage or element error in the inverter and a current flows constantly to the resistor, the thermal fuse in the braking resistor circuit will blow. In this case it is not uncommon for a small amount of smoke to arise from the resistor, and the resistor surface temperature may be extremely high. Do not install the resistor directly onto any flammable surface or subpanel.

**CAUTION:**

When using a braking resistor other than the standard unit, install an input contactor or a main circuit breaker with a shunt trip on the inverter incoming power. Electrically interlock this device so that the power circuit will open with the operation of the fault relay (FL) in the inverter or an external overload relay.

**TABLE 11-1: SETTING OF THE REGENERATIVE DISCHARGE RESISTOR PROTECTION PARAMETER**

| [Pb] Value | Function |
|---|---|
| 0 | Regenerative Discharge Braking not engaged. |
| 1 | Regenerative Discharge Brake engaged, no braking resistor overload detection (when an VERY large resistor is used). |
| 2 | Regenerative discharge brake engaged, braking resistor overload detection is ON (when the standard size resistor is used). |

The overvoltage stall operation refers a voltage increase on the DC bus during deceleration. This DC voltage rise can be automatically limited to prevent tripping on overvoltage. Thus, the deceleration time may be longer than the set deceleration time.

**TABLE 11-2: SETTING OF THE OVERVOLTAGE STALL PARAMETER**

| [OPSS] Value | Function |
|---|---|
| 0 | Overvoltage stall operates. (This setting is ignored if [Pb] is 1 or 2.) |
| 1 | No overvoltage stall operation. |

## 11.2 DC Injection Braking Start-up Frequency [dbF], DC Injection Braking Voltage [dbU], and DC Injection Braking Time [dbt]

The inverter can be stopped by using DC injection Braking during decelerating stop. The LED display will show [db] when the DC injection braking function is operating. Simple positioning is possible using DC injection braking.

The DC injection braking start-up frequency [dbF] can be set between 0 to 10 HZ. If [dbF] is set to a value other than 0, the DC injection braking voltage [dbU] can be set between 0% and 20%, and the DC injection braking time [dbt] can be set between 0 and 5 seconds.

An example of DC injection braking operation is shown in Figure 11.1.
If the F switch is turned OFF, the motor will decelerate with regenerative braking according to the deceleration time set with [dEC], and the DC injection braking will be activated with the DC injection braking start-up frequency set with [dbF]. Then the motor will stop.

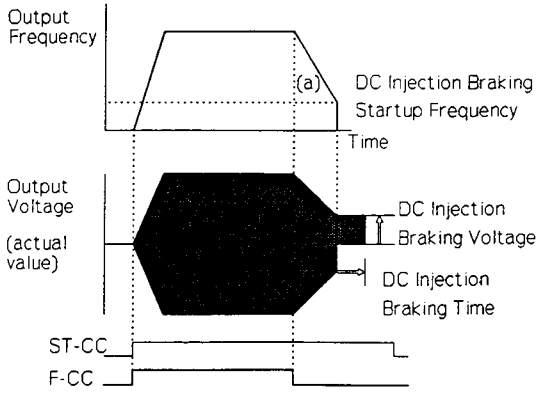


Figure 11.1 (a) Example of DC Injection Braking Operation with [dbv] NOT set to 0

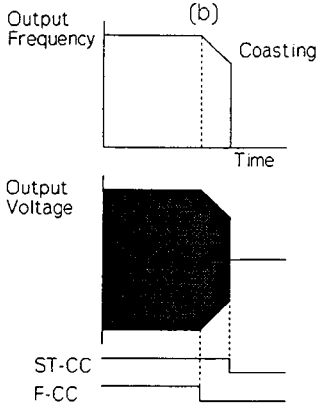


Figure 11.1 (b) Example of DC Injection Braking Operation with Coasting Stop

(a) DC injection braking stop. If the [dbU] setting is 0, Coasting stop will be executed after [dbF].

(b) Coasting stop will be executed if the ST switch is turned OFF before the DC injection braking start-up.

**CAUTION:**

DC injection forcibly stops the motor from rotating. Do not set the DC injection braking voltage [dbU] or the DC injection braking time [dbt] higher than necessary.

The DC injection braking function will operate at under the DC injection braking starting frequency even when the frequency setting signal is lowered below the strut-up frequency from the touchpad or external unit and Decelerating Stop is executed.

The DC injection braking function will operate under the start-up frequency when the frequency setting signal is gradually lowered.

## 11.3 Emergency Stop [ESTP]

The Emergency Stop feature is available from the touchpad, when the drive is NOT in panel control. It is also available from a remote control signal. There are three distinct stopping methods, as shown in chart 3 below. Information on emergency stop is found in other sections of this manual, but all information concerning the emergency stop function is summarized in this section of the manual.

**TABLE 11-3: EMERGENCY STOP PARAMETERS**

| [ESTP] Value | Function |
|---|---|
| 0 | Coasting stop. |
| 1 | Decelerating stop. |
| 2 | Emergency DC injection braking stop. |

NOTE: If 2 is selected also set the DC injection braking time [Edbt], DC injection braking start frequency [dbF], and DC injection braking amount [dbU].

### 11.3.1 Emergency Stop from the Touchpad

See Chapter 8, Section 3 for instructions to stop the drive from the touchpad.

Implement the following procedure to perform an emergency stop from the touchpad.

**Emergency Stop When the Drive is NOT in Panel Control:**

Step 1. Press the STOP/RESET button on the touchpad.
The drive mode is activated and the LED will display [EOFF]

Step 2. Press the STOP/RESET button again.
[E] (flashing) will be displayed on the LED and Emergency Stop will be activated. Emergency Stop can be Coasting, Decelerating, or DC Injection Braking type, as shown above, depending on the programmed parameters for this method of stopping.

**CAUTION:**

The Emergency Stop command is a command to forcibly stop the operation by depressing the inverter unit keys on the touchpad when the drive is not controlled from the touchpad. This cannot be prohibited by any setting of the command mode. The emergency stop will be regarded as a trip and will be registered as a past error in the trip history section of the drive memory.

## 11.3.2 Emergency Stop Using Remote Control Signals

Emergency stop may also be initiated from control signals connected to the proper terminal blocks. The following instructions explain this procedure.

**Emergency Stop from Remote Control:**

1. Connect an "emergency stop" switch between EX-CC on the control circuit terminal block as shown in Figure 11.2

2. Confirm that the input terminal selection is set to 2 or 3. (Parameter [ltb] = 2 or 3.) This insures the drive will accept this remote signal. (The factory default setting for this parameter is [ltb] = 0.)

3. Confirm that the "PANEL CONTROL" lamp is not ON. Turn off the "PANEL CONTROL" lamp by pressing the PANEL/REMOTE key.

4. The type of emergency stop [ESTP] can be selected with the operation panel. See Table 11-3 above.

5. When the EX terminal is turned ON, emergency stop will be activated according to the parameter selected in [ESTP], the inverter will trip, ([E] will flicker on the LED display) and the Fault (FL) relay will operate.

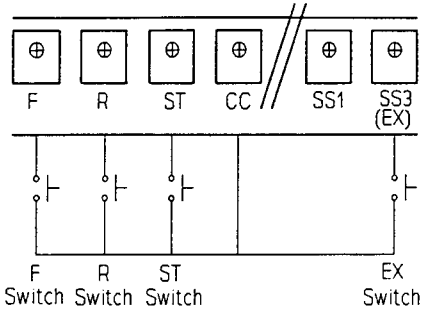


Figure 11.2 Forward, Reverse, and Emergency Stop Switches

## 11.3.3 Emergency DC Injection Braking Stop Control Time [EdbE]

When [EStP] - 2, (emergency DC injection braking stop is selected) and DC injection braking is not required during normal stop, set the DC injection braking time to [dbt] - 0.

See Section 11.2 in this Chapter for instructions to set parameters [dbU] and [dbt].

## 11.4 Retry [rtry]

The retry function allows the drive to perform an auto-restart, when this feature is desirable and applicable. The retry feature operates after a protective function or parameter trips the drive.

**CAUTION:**

Before using the retry function confirm that there will be no problems with the load or application when an automatic restart occurs. Certain large inertia loads, or loads requiring large torque boost to start may not work properly with the retry feature. Also, personnel safety is an obvious consideration.

TABLE 11-4: RETRY PARAMETERS

| [rtry] Value | Function |
|---|---|
| 0 | OFF (The trip status is protected, and automatic start does not occur when the inverter trips.) |
| 1 | ON (Automatic restart occurs when the inverter trips under the proper conditions.) |

When the retry function is selected, the inverter will automatically restart when the power is restored after a momentary power interruption or during faults due to overcurrent, overvoltage, or overload.

The fault indication and retry procedure are shown in Table 11-5.

TABLE 11-5: FAULT INDICATION AND RETRY PROCESS

| Fault Indication | Retry Process | Stop Conditions |
|---|---|---|
| Momentary Power Interruption<br><br>Overcurrent<br>OR<br>Overvoltage<br>OR<br>Overload | Restarts continuously up to 5 times.<br><br>1st time: approximately 2 seconds after fault occurrence<br>2nd time: approximately 2 seconds after 1st retry.<br>3rd time: approximately 4 seconds after 2nd retry.<br>4th time: approximately 8 seconds after 3rd retry.<br>5th time: approximately 16 seconds after 4th retry. | If a trip other than overcurrent, overvoltage, or overload occurs during retry.<br>OR<br>if a momentary power outage occurs again.<br>OR<br>if the restart is not possible all five times. |

Further information about the [rtry] function:

1. Retry will NOT occur when the LED display show the following trip conditions:

   OCA : Phase overcurrent (IGBT) trip during starting.
   OCL : Load side overcurrent (output terminal check) at start-up.
   E : Emergency Stop
   EEP : EEPROM abnormality
   Err2 : RAM abnormality
   Err3 : ROM abnormality

2. During retry preparation, the trip cause and [rtry] will display alternately on the LED display.

3. The fault detection signal (FL) will turn ON during retry.

4. The intervals shown above may be longer if there is an error remaining after the initial fault is cleared. The retry will be carried out after the last error or fault is removed. All errors must be cleared before this function initiates.

5. Retry will not be carried out when trip retention is selected ([trCL] = 1.)

6. Use a latched type emergency stop switch (EX-CC). Emergency stop will not be executed during retry preparation if a momentary contact control system is used.

## 11.5 Power Control Function [UuC]

This parameter enables the drive to continue operation by using the regenerative energy from the motor when a momentary power interruption occurs. There are some cases when continuous operation is not possible due to the driven machines's inertia or load status, so use this feature in combination with the retry function.

**TABLE 11-6: POWER CONTROL FUNCTION PARAMETERS**

| [UuC] Value | Function |
|---|---|
| 0 | Power control function not used. |
| 1 | Power control function used. |

The power control function will activate in response to power interruptions up to 100 msec. long.

## 11.6 Electronic Thermal Protective Level [tHr]

The electronic thermal operation level [tHr] can be adjusted according to the motor rating and characteristics. The range of values for this parameter can be set between 10 and 100% of the drive's rated output current.

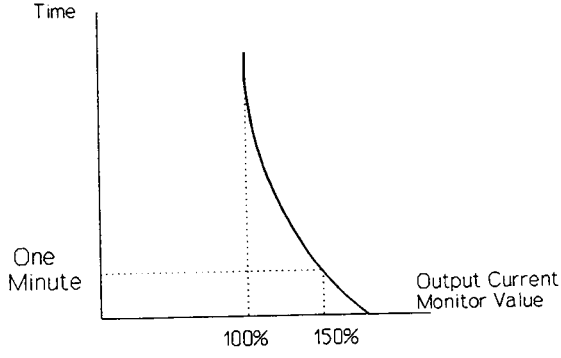


Figure 11.3 Electronic Thermal Operation Characteristics

## 11.7 Stall Prevention Function Activation Level [StL]

The stall prevention parameter [StL] can be set between 10% and 150% of the rated output current. The stall prevention parameter is NOT activated when set to 200%. If the current exceeds this stall prevention operation level, the frequency and voltage will be retarded and drive tripping will be prevented. When this parameter operates the acceleration and deceleration times will be slightly longer than their set values.

## 11.8 Electronic Thermal Protection Characteristic Selection [OLn]

The electronic thermal characteristics [OLn] can be changed from/to "standard motor" or "VF motor", according to the type of motor to be driven by the drive. Furthermore, the stall feature can also be selected in conjunction with the [OLn] function.

TABLE 11-7: ELECTRONIC PROTECTION PARAMETERS

| [OLN] Value | Function |
|---|---|
| 0 | Standard motor, without stall capability. |
| 1 | Standard motor, with stall capability. |
| 2 | VF motor, without stall capability. |
| 3 | VF motor, with stall capability. |

Explanation of the soft-stall function:

If the inverter detects an overload, the output frequency and voltage are automatically lowered before overload tripping can occur. Operation continues without tripping at the frequency where the load current is balanced. This parameter is typically applicable to variable torque type loads such as fans, pumps, and blowers, etc. where the load current decreases when the operation speed decreases.

**CAUTION:**

Do not apply the stall function to constant torque characteristic loads (any load with a constant load current regardless of speed).

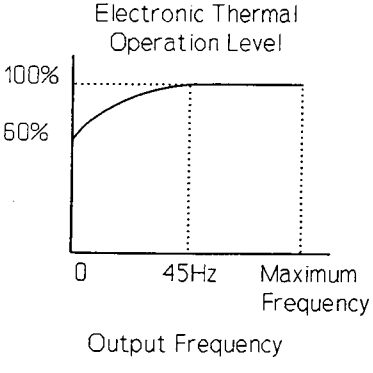


Figure 11.4 Standard Motor Electronic Thermal Operation Characteristics

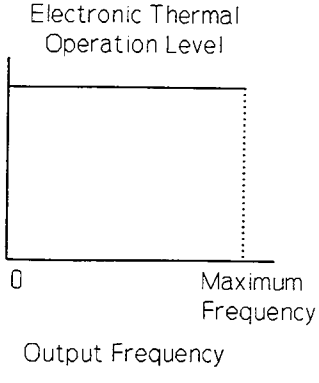


Figure 11.5 VF Motor Electronic Thermal Operation Characteristics

## 11.9 Retention of Trip [trCL]

The trip status can be stored in memory in such a fashion as to prevent an auto-restart or a manual restart, even when the power is turned OFF. If the inverter trips due to the operation of the protective functions, it is necessary to reset the drive before the drive can run again, when the [trCL] parameter is set to 1. See Chapter 8.7 for instructions to reset the drive from the touchpad.

**TABLE 11-8: TRIP RETENTION PARAMETERS**

| [trCL] Value | Function |
|---|---|
| 0 | Clear the trip status with power OFF. (The trip status will be cleared when the power is turned ON again. Thus the operation will restart when the operation signal is valid.) |
| 1 | Store trip cause when power is turned OFF. (The trip cause will display when the power is turned ON again. Restart is only possible by manually resetting trip cause.) |

The trip cause will be stored in memory when the trip retention is set. ([trCL] - 1.) However, the trip status will not be registered, and therefore the fault relay (FL) will NOT be ON. When a fault is cleared by removing power to the drive, the fault relay (FL) will reset when the power is turned ON again.

# Chapter 12 Control and Communication Parameters [Gr.CC]

This portion of the manual describes the different parameters available for frequency control of the basic Toshiba VF-SX drive features. These different values and settings are shown below.

1. Differences Between Start-up Frequency and Operation Starting Frequency

2. [F-St] Start-up Frequency Setting

3. [Frun] Operation Starting Frequency
4. [FHYS] Operation Starting Frequency Hysteresis

5. [FJ.n] Jump Frequency
6. [FJ1, bFJ1, FJ2, bFJ2, FJ3, dFJ3]
   Jump Frequencies and Bandwidths

7. [CF] PWM Carrier Frequency
8. [CFS] Motor Tone Selection

9. [POUt] Output Voltage Adjustment
10. [PAdJ] Power Voltage Compensation

11. [Aub] Automatic Torque Boost
    11.1 [CUr0] No-Load Current
    11.2 [ubH] Torque Boost Maximum Value

12. [SFC] Slip Frequency Compensation
    12.1 [CUr0] No-Load Current
    12.2 [SFr] Motor Rating Slip Frequency

## 12.1 Differences Between Startup Frequency and Operation Starting Frequency

**START-UP FREQUENCY: [F-St]**

The start-up frequency output parameter is the lowest initial frequency output that the drive can ever send to the motor. The drive does NOT ramp up to this output level. When the frequency setting signal increases enough to reach the assigned start-up frequency, this frequency value is immediately output to the motor. The drive will not provide any output frequency to the motor until the frequency setting signal reaches the assigned start-up frequency. This start-up frequency parameter is always an assigned frequency, and cannot be set to more than 10 Hz. Similarly, when the drive is decelerated to stop, the drive output devices turn off at the start-up frequency, and the motor coasts to stop from that point.

**OPERATION STARTING FREQUENCY: [Frun]**

The operation starting frequency is also an initial frequency output parameter, but it can be set to a much higher frequency value than the startup frequency. The value of this parameter can be set as high as the maximum frequency value, if necessary. Once the frequency setting signal matches or exceeds the operation starting frequency the output of the drive RAMPS to the run frequency currently assigned by the chosen frequency setting signal. Similarly, the drive will RAMP down to a stopping point when the frequency setting signal drops below the operation starting frequency. The operation starting frequency parameter also has "hysterisis" as an option. See Section 12.2.3 and Figure 12.2 below for an explanation of hysterisis.

## 12.2.1 Start-Up Frequency [F-St]

This value is the initial starting frequency the drive will output to the motor. The motor start-up torque characteristics, can be adjusted to a suitable setting for virtually any application. The start-up frequency can be set between 0.5 and 10 HZ.

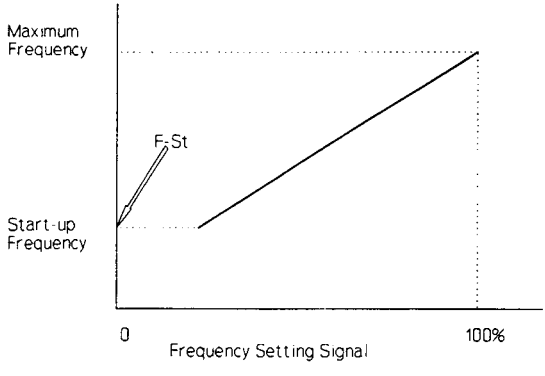


Figure 12.1 Start-up Frequency

## 12.2.2 Operation Starting Frequency [Frun]

The drive will output a frequency ramp when the operation starting frequency [Frun] is reached or exceeded by the frequency setting signal. The operation starting frequency parameter can be set between 0 and the maximum frequency ([FH]) setting.

## 12.2.3 Operation Starting Frequency Hysteresis [FHYS]

This value provides "hysteresis", or memory in the vicinity of the operation starting frequency so that the drive will not toggle ON and OFF if a remote control signal is oscillating just above and below the operation starting frequency. In Figure 12.2 below, the drive will turn off when the remote setting signal drops below [Frun] - [FHYS], and will not allow the drive to turn on again until the frequency setting signal exceeds [Frun] + [FHYS].

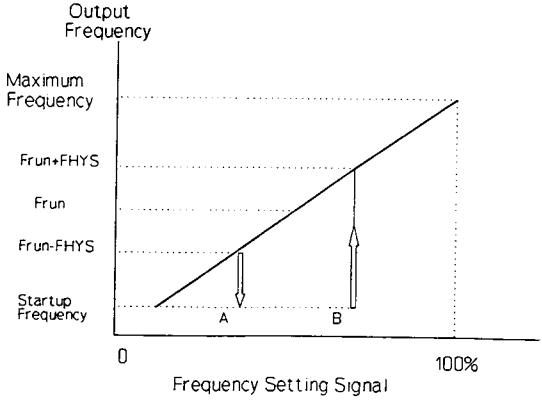


Figure 12.2 Operation Starting Frequency

## 12.3 Jump Frequency and Jump Bandwidths [FJ.n] [FJ1] and [bFJ1], [FJ2] and [bFJ2], [FJ3] and [bFJ3]

This feature allows the drive and motor to operate while avoiding the machine system resonance points where mechanical vibration or noise becomes excessive.

To use this feature proceed with the following steps:

1. Enter [Gr.CC] and [FJ.n]. Set this value to 1 (jump function engaged). Three separate jump frequency points and bandwidths can be now assigned and programmed.

2. The three jump frequencies [FJ1], [FJ2], and [FJ3] can be set to any value between 0 HZ and the maximum frequency, in HZ.

3. The jump bandwidths can be set between 0 and +/- 30 HZ in units of HZ. Frequency jump does NOT engage when accelerating or decelerating through the programmed frequencies and bandwidths. It does prevent a frequency setting from the touchpad or a remote source from running the drive/motor combination continuously in one of the bandwidths assigned to be locked out by the procedure above.

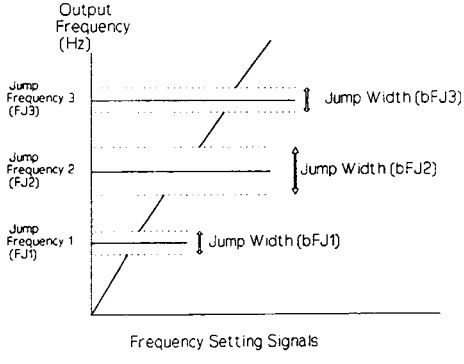


Figure 12.4 Example of Frequency Jump Parameters

## 12.4 PWM Carrier Frequency [CF] and Motor Tone Selection [CFS]

The acoustic noise of the motor changes when the PWM carrier frequency is changed. Changing the PWM carrier frequency is usually effective in quieting the mechanical vibration noise when a resonation occurs at the load machine motor fan cover. Other system characteristics are also affected by the carrier frequency.

The PWM carrier can be set between 0.5 kHZ and 3 kHZ.

Motor noise can also be changed by selecting "integral tone" as an option from the motor tone selection table.

**TABLE 12-1: MOTOR TONE PARAMETERS**

| [CFS] Value | Function |
|---|---|
| 0 | Monotonous tone |
| 1 | Integral tone |

NOTE: The motor tone parameter [CFS] cannot be changed until the drive has been stopped.

## 12.5 Output Voltage Adjustment [POUt] and Power Voltage Compensation Function [PAdJ]

The V/f characteristics can be set for a motor with a lower rated voltage by using the output voltage reduction function. When the power voltage compensation function is used , the output V/f characteristics are automatically compensated to be constant even when the power voltage changes, so that the best V/f control is possible at all times. However, an output voltage value greater than the power voltage input value is not possible. This function is suitable for machinery requiring a large start-up torque.

1. Output Voltage Reduction Function [POUt]

   The output voltage can be reduced proportionally to the input voltage. The output voltage can be set between 0 and 100%.

2. Power Voltage Compensation Function [PAdJ]

   If this parameter is set to 1 the absolute value of the output voltage can be set between 0 and 120%.

The rated output voltage can be set according to the motor rated voltage.Even when moving into areas with differing input voltages, the V/f characteristics do not need to be readjusted or the rated motor voltage changed. The voltage value is set in the [POUt] parameter as 200 Volts for 100%.

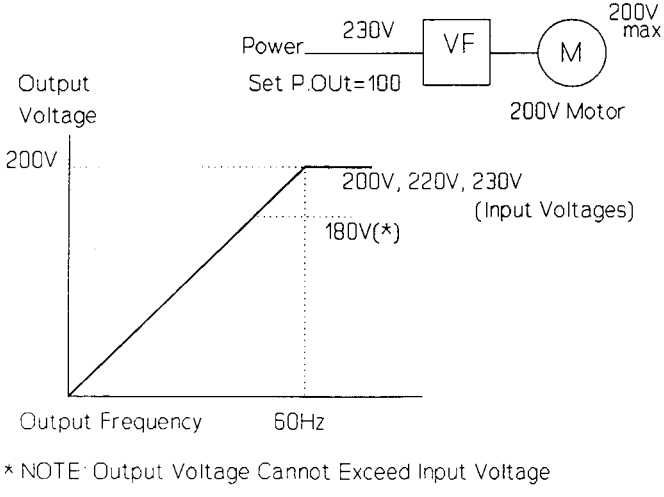


Figure 12.5 Example of 200 Volt Class
Output Voltage Adjustment

## 12.6 Automatic Torque Boost [Aub]

It is possible to set the VF-SX drive to provide automatic torque boost. This feature adjusts the output voltage within the range of the slanted line shown in Figure 12.6, according to the state of the load current.

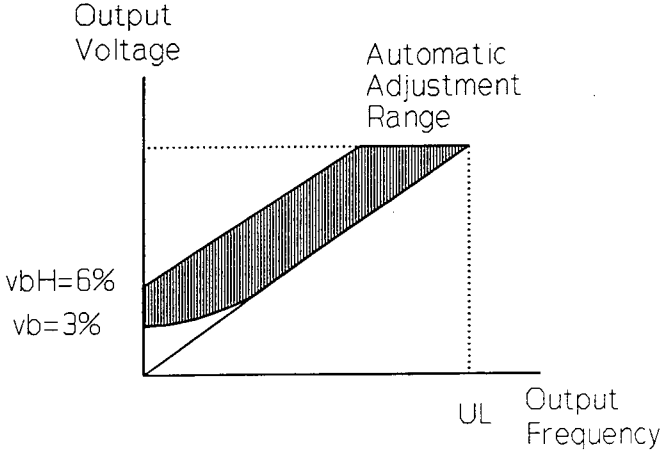


Figure 12.6 Automatic Torque Boost

TABLE 12-2: AUTOMATIC TORQUE BOOST SETTINGS

| [Aub] Setting | Function |
|---|---|
| 0 | Disengaged (OFF) |
| 1 | Engaged (ON) |

## 1. No-load Current Setting

The parameter [CUr0] of the [Gr.CC] group is set by default to the standard value, 10%. Additional adjustment is generally not required. However, in the following cases adjustment of this parameter may be effective.

1. If an over-excited state occurs during low voltage output (when the output frequency is low), slightly increase [CUr0]. If the torque is not quite sufficient, lower this parameter slightly. The starting point of the voltage can be adjusted with the torque boost setting value (parameter [Ub] in family [Gr.F].) This parameter regulates the lower limit of the automatic torque boost function.

2. This parameter is also used as the setting data of the no-load current in the slip frequency compensation function. When this parameter is changed, the setting data for the no-load current in slip frequency compensation function will also be changed.

3. The value will not always be the same as the no-load current value noted on the applicable motor data sheet or rating nameplate.

## 2. Torque Boost Maximum Value Setting

The maximum value of the automatic adjustment range is set by the parameter [UbH] of the [Gr.CC] group. The standard default value is 6%.

The minimum value of the automatic adjustment at low frequencies is the torque boost setting value [Ub] of the fundamental group [Gr.F]. The standard default setting for parameter [Ub] is 3%.

If the automatic torque boost setting [UbH] is set lower than the initial starting torque boost [Ub], then the automatic torque boost is not active at any output frequency, and the starting torque boost is the only boost present, and only at lower speeds.

## 12.7 Slip Frequency Compensation [SFC]

The motor speed can be controlled to a constant speed even during load fluctuations. See Figure 12.7 below.

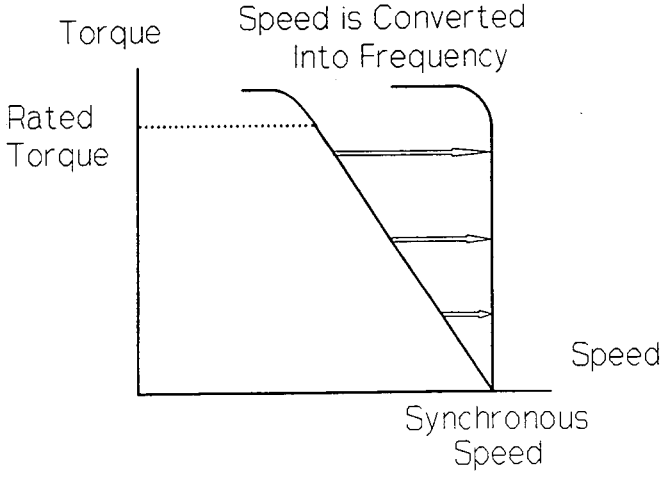


Figure 12.7 Slip Frequency Compensation

TABLE 12-3: SLIP FREQUENCY COMPENSATION SETTINGS

| [SFC] Setting | Function |
|---|---|
| 0 | No compensation |
| 1 | Compensation is active |

1. **No-Load Current Setting**

The parameter [CUr0] of group [Gr.CC] can be set at the standard default value of 10% for most applications. Additional adjustment is generally not necessary. However, in the following cases adjustment of this parameter may be effective.

1. This parameter will affect the slip compensation starting point. When the value of [CUr0] is increased, the value of the output torque when compensation begins will increase slightly.

2. This parameter is also used as the setting data of the no-load current in automatic torque boost function. When this parameter is changed, the setting data for the no-load current in automatic torque boost function will also change.

3. The value will not always be the same as the no-load current value noted on the application motor data sheet or rating nameplate.

2. **Motor Rating Slip Frequency**

The rated slip frequency is defined by the motor data available on the nameplate or motor data sheet. Refer to this data when setting parameter [SFr]

EXAMPLE:

Set slip frequency compensation for a 1 HP motor, 230 volts, 60 HZ rated. The motor nameplate states that the rated speed is 1710 RPM. (Synchronous speed is 1800 RPM)

$$\text{Rated Slip Frequency} = \frac{\text{(Synchronous Speed - Rated Speed)}}{\text{Synchronous Speed}} \times \text{Output Frequency}$$

$$= \frac{(1800 - 1710)}{1800} \times 60$$

$$= 3 \text{ HZ; (Set parameter [SFr] to 3)}$$

# Chapter 13 Meter Adjustment Parameters [Gr.AM]

This section of the manual discusses the procedure to connect remote metering to the Toshiba Model VF-SX drive. The Universal Unit Multiplication Factor function alters the drive's LED display, and causes it to display customized parameters as defined by users. See the explanations below.

1. [FMAM] Connected Meter Adjustments
2. [FM] Frequency Meter Adjustment
3. [AM] Ammeter Adjustment

4. [rr-b] Adjustment of the RR Input Terminal Bias
5. [rr-G] Adjustment of the RR Input Terminal Gain

6. [dSP2] Universal Unit Multiplication Factor

## 13.1 Meter Connections

A frequency meter or an ammeter can be connected directly to the drive. Select a full scale 1 mADC ammeter, full scale 7.5 VDC-1mADC voltmeter, or rectifying AC voltmeter for the meter to be driven by the drive. The meter zero-adjust is performed with the meter adjustment screw. Calibration is carried out by adjustments on the touchpad. It is not necessary to connect a variable resistor for external calibration.

### 13.1.1 Connection of a Frequency Meter [FM]

A frequency meter can be connected between FM an CC on the control circuit terminal block. Pay particular attention to the polarity. Refer to Table 13.1 for calibration instructions. The connection of the frequency meter is shown in Figure 13.1.

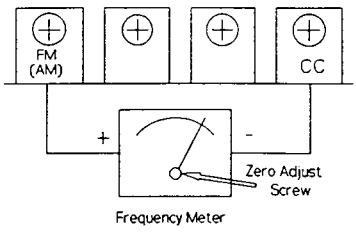


Figure 13.1 Connection of a Frequency Meter

## 13.1.2 Connection of an Ammeter [AM]

An ammeter can be connected between AM and CC on the control circuit terminal block. Pay particular attention to the polarity. Also refer to Table 13.1 for calibration. The connection of the ammeter is shown in Figure 13.2.

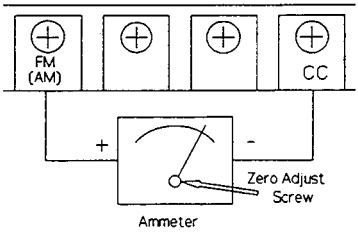


Figure 13.2 Connection of an Ammeter

NOTE: The characteristics of the ammeter output will change slightly according to the conductive current as shown in Figure 13.3. Please take note of this variance, especially when the drive is lightly loaded.

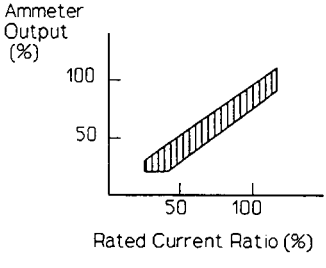


Figure 13.3 Ammeter Display Tolerance

The following table shows an example of setting and adjusting a remote frequency meter. This function is used to calibrate an analog frequency meter or current meter. The adjustment operations are the same as the parameter setting display functions. However, the changes with the [△] and [▽] keys are not shown on the LED display, but are shown with the movement of the meter needle. Adjustment is carried out by matching the value indicated by this needle to the LED value. Refer to the Chapter 7 for the parameter list. An example of programming a frequency meter is shown below.

TABLE 13-1: FREQUENCY METER ADJUSTMENT EXAMPLE

| Key Operation | LED Display | Explanation |
|---|---|---|
| | 0.0 | Model SX VFD is in Drive Mode. |
| PRG | :Gr.U | Change Mode to the Programming Mode. |
| △ ▽ ENTER | :Gr.AN | Select [Gr.AN] by scrolling the △ ▽ keys. |
| △ ▽ | :FNAN | Select the parameter using the △ ▽ keys, and set to<br>FNAN←→FN←→dSP2: when the standard default setting or previous default setting is FN.<br>FNAN←→AN←→dSP2: when they previous setting is AN. |
| ENTER △ ▽ | :0 | Select the parameter name. Move to the data display status and select 0 (Frequency meter connection) with the △ ▽ keys.<br>0: Frequency Meter Connection<br>1: Ammeter Connection |
| ENTER | :FN | The next parameter name is displayed, but if the [FNAN] in the last parameter was 1 (ammeter connection) the [AN] parameter will be displayed here. |
| ENTER | :60.0 | Determine the parameter name and enter the FM adjustment mode. (Operation frequencies are displayed.) |
| △ ▽ | :60.0 | Adjust the frequency meter with the △ ▽ keys. (This will cause the display to flicker.) The meter needle moves toward the constant reading on the LED display. Adjust the needle value with the △ ▽ keys until the LED display and the meter needle have the same value. |
| ENTER | 60.0 | Store the adjusted value into the inverter unit. The flickering display will stop. |

If the meter reading and the LED are the same then the setup has been completed. Return to the RUN mode by pressing the [PRG] key.

## 13.2 Frequency Setting Signal [rr-b], [rr-G]

**RR terminal Frequency Setting Signal Characteristics:**

The characteristics of the frequency signals input to the RR terminal and output frequency signals are as shown in Figure 13.4

Adjustment of the RR input terminal bias [rr-b]:

At the standard default setting the adjustment has been given an allowance to output the inverter output for the first time with a slight voltage applied on the RR terminal. To decrease this allowance, increase the [rr-b] value. If the value is too large, the inverter output a frequency even when 0 volts is input.

Adjustment of the RR input terminal gain [rr-G]:

At the standard default setting, the maximum frequency will be reached when the RR input is slightly below the upper limit voltage. This voltage can be set to 5 volts or 10 volts with the jumper pin (J1 or J2). To set this parameter so that the maximum frequency is reached with the upper limit voltage, lower the [rr-G] value. However, if the value is lowered too far, the maximum frequency will not be output even when the upper limit voltage is input.

To adjust the RR input terminal so that 0 volts corresponds to an inverter output of 0 HZ, set [rr-b] to "126" (a change of one corresponds to about 0.01 volts). To adjust the RR input terminal so that the maximum input voltage corresponds to the maximum inverter output frequency, set [rr-G] to "84" (changing this value by "1" corresponds to about 0.01 volts).

When adjusting parameters [rr-b] and [rr-G], first adjust parameter [rr-b], and then adjust parameter [rr-G].

**NOTE**

The [rr-G] parameter is affected by changes in the [rr-b] parameter. If [rr-b] is increased the value of [rr-G] should be decreased to compensate.

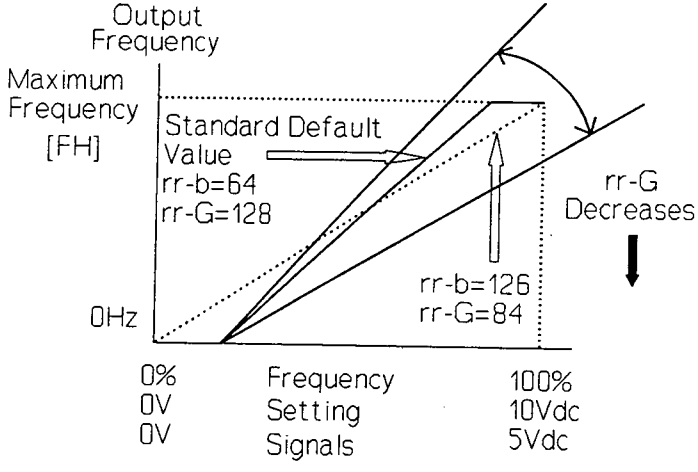


Figure 13.4 Frequency Setting Characteristics of the RR Terminal

The parameters [rr-b] and [rr-G] affect the output frequency from the drive to the motor as mathematically determined by the following equation:

OUTPUT FREQUENCY =

([FH]/100) X {Frequency Setting Voltage + ([rr-b]-128)/10.56} X {(3/4) X (1+([rr-G]/256)}.

If all parameters are set to the factory default settings, and the frequency setting voltage is 50% of the maximum ("Frequency Setting Voltage" in the equation above is equal to "50"), the the output frequency is 39.5 Hz.

## 13.3 Universal Unit Multiplication Factor [dSP2]

The LED display on the touchpad can be changed to display many values other than HZ. Use the Universal Unit Multiplication Factor to revise the value of this display. The values of this multiplication factor can be adjusted from 0.01 to 200.

"LED Display" = {"Frequency Display" multiplied by "Unit Multiplication Factor"}

The LED monitor can display the range from 0.00 to 9999. When the value to be displayed on the monitor exceeds 9999 the four digits from the tenth place to ten thousand place will flicker.

EXAMPLE: Set LED display to show motor RPM, in lieu of HZ.
Assume motor is 4 Pole (1800 RPM).

1800/60 = 30, so 30 is the Universal Unit Multiplication Factor.

Step 1. Enter programming group [Gr.AM, dSP2].

Step 2. Change Universal Unit Multiplication Factor from 0 (the default setting) to 30.

Step 3. Run drive. Where previously the LED displayed HZ, the value now displayed will be in motor RPM.

NOTE: All displays which formerly showed a value in HZ will now display a value based on "Frequency" X "Universal Unit Multiplication Factor".

# Chapter 14 General Drive Specifications

## 14.1 Drive Specifications

TABLE 14-1: DRIVE SPECIFICATIONS

| Item | Contents | | | | | | |
|---|---|---|---|---|---|---|---|
| Voltage Class | 230 Volts Class | | | | | | |
| Motor Output Rating (KW/HP) | 0.1 1/8 | 0.2 1/4 | 0.4 1/2 | 0.75 1 | 1.5 2 | 2.2 3 | 3.7 5 |
| 3 Phase Model VFSX- | | | | | | | |
| Type | 2001UP | 2002UP | 2004UP | 2007UP | 2015UP1 | 2022UP1 | 2037UP1 |
| Capacity (KVA) | 0.3 | 0.6 | 1.2 | 2.0 | 3.0 | 4.0 | 6.5 |
| Rated Output Current (Amps) | 0.8 | 1.5 | 3.0 | 4.5 | 7.5 | 10.0 | 16.5 |
| Voltage | 3 Phase; 200 Volts -- 230 Volts; | | | | | | |
| Frequency | 50/60 HZ | | | | | | |
| Tolerance | Voltage: +/- 10% Frequency: +/- 10% | | | | | | |
| Control Method | Sinusoidal PWM Control | | | | | | |
| Rated Output Voltage (Volts) | 3 Phase, 200-230 Volts (Proportional to Input Power) | | | | | | |
| Rated Output Frequency | 0.5 -- 240 HZ, Set to 0.5 -- 80 Hz at Factory. Maximum Frequency adjustment from 30 - 240 HZ. | | | | | | |
| Frequency Resolution | 0.38% | | | | | | |
| Frequency Precision | +/-0.01% to maximum output frequency. (Digital setting, -10 to 50 deg C / Analog setting 25 deg C, +/- 10%) | | | | | | |
| Voltage/frequency Characteristics (V/f) | V/f constant pattern or variable torque pattern, selectable. Base frequency (25-240 HZ) adjustable, torque boost (0-30%) adjustable, start-up frequency (0.5-10 HZ) adjustable. | | | | | | |
| Overload Current Rating | 150% for one minute | | | | | | |
| Frequency Setting Signal | 3K ohm potentiometer (1-10K ohm potentiometer acceptable)<br>0-10VDC (input impedance 30K ohm)<br>0-5VDC (input impedance 15K ohm)<br>4-20mA DC (250 ohm) | | | | | | |
| Regenerative Discharge Resistor | N/A | External Braking Resistor (Optional) | | | | | |

TABLE 14-1 (Con't)

| | |
|---|---|
| Acceleration and Deceleration Time | 0.1 - 3600 seconds, Acc./Dec. time, 1/2 changeover, S-Character Acc./Dec. pattern selection |
| DC Injection Brake | Braking start frequency (0-10 HZ), Braking voltage (0-20%), Braking control time (0-5 sec.), Emergency DC injection braking stop control time (0-10 sec.), all adjustable |
| Protective Functions | Stall prevention, current limit, overcurrent, overcurrent during braking, load side short circuit, (detection), undervoltage, momentary power failure, power control function, overload due to electronic thermal, phase overcurrent at start, load side overcurrent at start, braking resistance overload, cooling fin overheating, emergency stop. |
| Electronic Thermal Characteristics | Changeover of standard motor/VF motor for constant torque adjustment of electronic thermal stall prevention operation level |
| Reset | Reset when 1a contact point is closed , or with panel. Set trip retention and clear. |
| 4-Digit, 7-Segment LED | Display of output frequency, OFF, alarm trip case , parameter name, data and universal units. |
| "Charge" Indication LED | Main circuit capacitor charge indication. |
| Fault Detection Signal | Output of 1C contact point (during 250 VAC - 2A or 30VDC - 2A resistance load, and 1.5A rating for induction load.) |
| Low Speed, Speed Reached, Upper and Lower Limit Frequency Signal | Open collector output (24 VDC, maximum of 50 MA), 2 points.) |
| Frequency Meter and Ammeter Output | 1 mA DC full scale ammeter or 7.5 VDC-1 mA DC voltmeter/rectifying AC ammeter |
| Enclosure | NEMA 1 |
| Cooling Method | Self cooled 1 HP and smaller. Fan cooled 2 HP and larger. |
| Color | Munsell symbol N1.5 |
| Service Environment | Indoor, altitude under 1000 meters (3300 ft), locations not in direct sunlight, nor where there is corrosive gases or steam. |
| Ambient Temperature | -10 to +40 deg C. (Maximum 50 deg C when heating caution plate is removed.) |
| Relative Humidity | 90% or less, non-condensing |
| Vibration | 0.5G or less (20-50 Hz), 0.1mm or less (50-100 Hz). |

## 14.2 External Dimensions

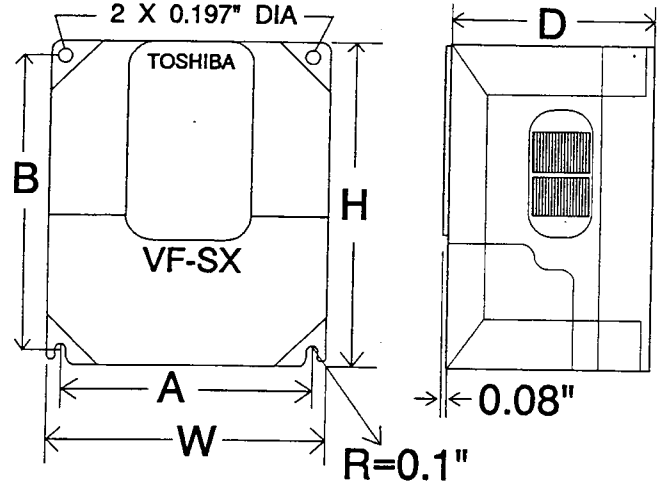


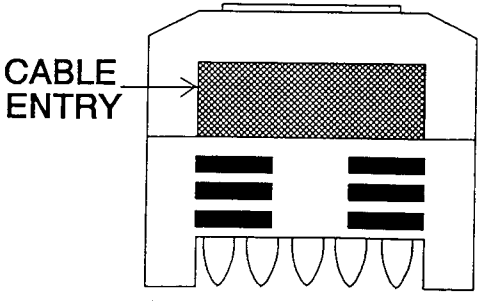


**FIGURE A**

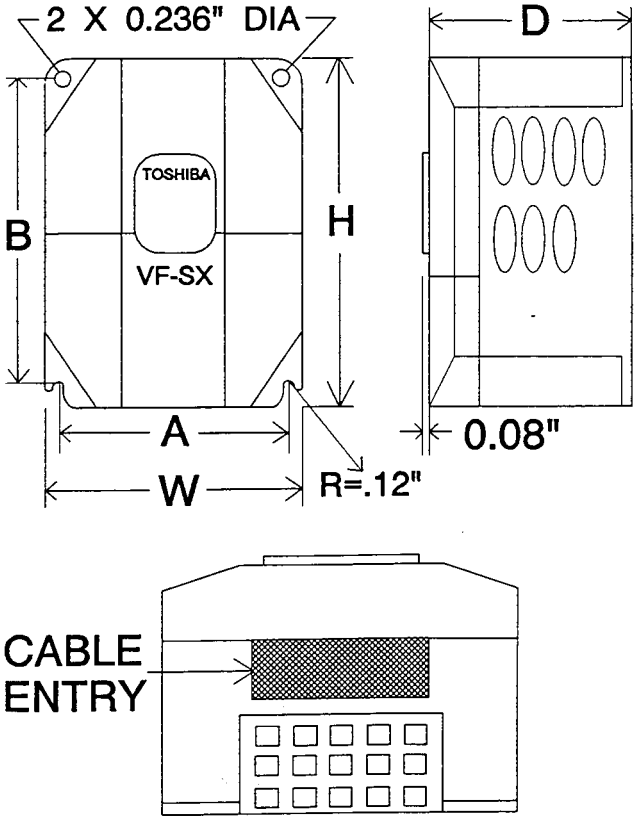


**FIGURE B**

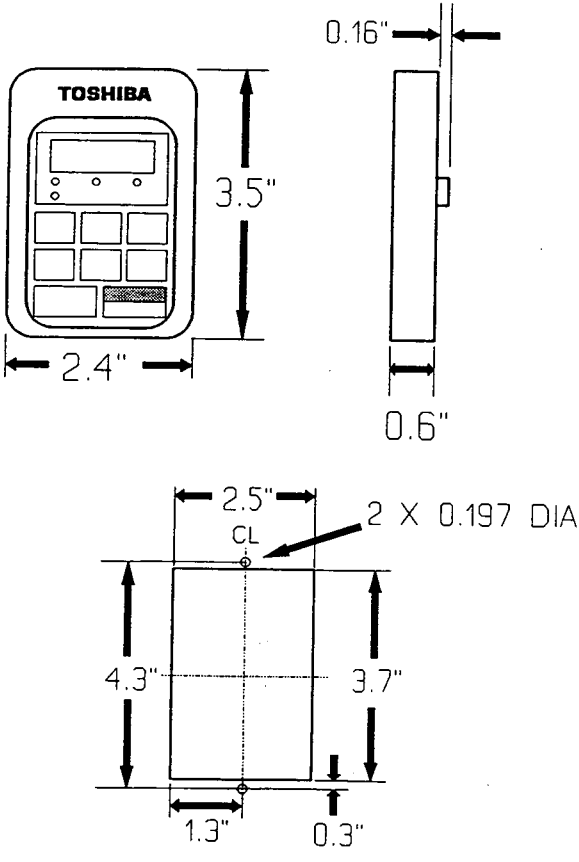


# TOUCHPAD DIMENSIONS

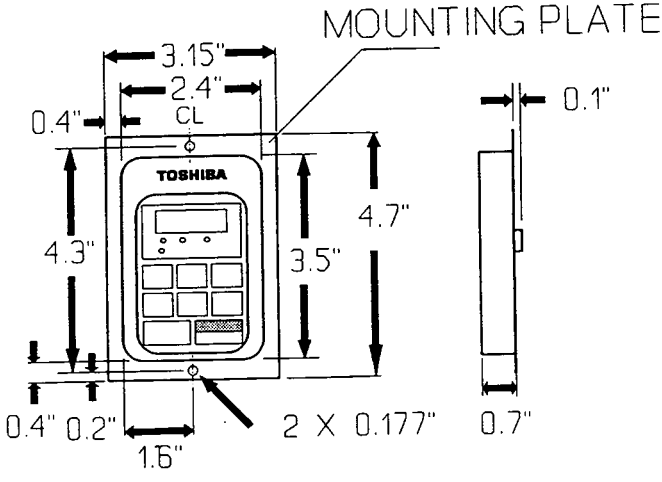


# MOUNTING PLATE DIMENSIONS

TABLE 14-2: VF-SX DRIVE WEIGHTS AND DIMENSIONS

| Outer Structure | Motor Output | Drive Model No. | | | | | | Figure | Approximate Weight |
|---|---|---|---|---|---|---|---|---|---|
| Enclosed Type | (HP) | VFSX- | W | H | D | A | B | | |
| | 1/8 | 2001UP | 4.1 | 5.9 | 3.2 | 3.7 | 5.4 | A | 1.5 |
| | 1/4 | 2002UP | 4.1 | 5.9 | 3.2 | 3.7 | 5.4 | A | 1.5 |
| | 1/2 | 2004UP | 4.1 | 5.9 | 3.5 | 3.7 | 5.4 | A | 2 |
| | 1 | 2007UP | 4.1 | 5.9 | 4.7 | 3.7 | 5.4 | A | 3 |
| | 2 | 2015UP1 | 5.5 | 7.9 | 6.1 | 5.0 | 7.3 | B | 6.5 |
| | 3 | 2022UP1 | 5.5 | 7.9 | 6.1 | 5.0 | 7.3 | B | 7 |
| | 5 | 2037UP1 | 5.5 | 7.9 | 6.1 | 5.0 | 7.3 | B | 7.5 |

NOTE:
Weights are in pounds.
Dimensions are in inches.
Output to motors is in HP

# Chapter 15 Options

An input reactor, radio noise reduction filter, braking resistor, and operation panel extension cable are all available as externally installed options.

## 15.1 Input Reactor

This device is installed to improve the power factor, or suppress the harmonic currents and line surges. This device is also recommended when the drive is connected to a large capacity power supply (over 200 KVA), or when any distortion source such as large power thyristors or arc furnaces are connected to the same power grid, or a large capacity inverter is connected to the grid.

## 15.2 Radio Noise Reduction Filter

This device is installed to block radio frequency harmonics that the inverter radiates outward to sensitive equipment, causing hum or static on remote devices, such as radios, portable telephones, or other nearby communication devices.

## 15.3 Braking Resistor

This device is used whenever very rapid deceleration of a load is required, or to increase the braking torque during deceleration of a large inertia load.

The braking resistor can become very hot during repeated braking applications. Be sure it is properly ventilated, and do not locate this device near any combustible material.

## 15.4 Connection Cable

Use this connection cable for an extension from the drive unit to the touchpad operation panel, if it is ever required to mount these two devices separately from each other.

# Chapter 16 Error Displays, Explanations, and Remedies

## 16.1 Inverter Trip Causes and Remedies

The trip codes and potential remedies are shown in the table below.

**TABLE 16-1: INVERTER TRIP CAUSES AND REMEDIES**

| Display | Explanation and Possible Remedy |
|---|---|
| OC1 | OVERCURRENT TRIP DURING ACCELERATION<br>1. Lengthen the acceleration time [ACC] setting.<br>2. Decrease the torque boost rate [Ub]. |
| OC2 | OVERCURRENT TRIP DURING DECELERATION<br>1. Lengthen the deceleration time [dEC] setting. |
| OC3 | OVERCURRENT TRIP DURING OPERATION<br>1. Sudden change in power required to drive load.<br>2. Reduce load variations. |
| OCA | PHASE OVERCURRENT TRIP DURING STARTING (CHECK GTR)<br>1. Check the main circuit devices. An output device (GTR) is probably defective and must be replaced. |
| OCL | LOAD SIDE OVERCURRENT AT STARTUP (CHECK OUTPUT TERMINAL)<br>1. The motor circuit wiring or motor insulation is defective.<br>2. Check the wiring and insulation. |
| OP2 | OVERVOLTAGE TRIP ON DC BUS DURING DECELERATION<br>1. Lengthen the deceleration time [dEC] setting.<br>2. Install optional regenerative discharge resistor. |
| OP | OVERVOLTAGE TRIP ON DC BUS<br>1. Check the power source for voltage surges or high voltage. |
| POFF | UNDERVOLTAGE (See Note 1)<br>1. The input voltage has decreased.<br>2. Check the power status and input side wiring for proper input voltage. |
| OL | MOTOR OVERLOAD TRIP<br>1. The load may exceed the capability of the drive.<br>2. The V/f characteristics or torque boost may be inappropriate. Try increasing the torque boost setting.<br>3. Increase the inverter size.<br>4. Make sure a 50 HZ motor is not being operated with inverter in 60 HZ mode. |
| OLr | OVERLOAD TRIP IN REGENERATIVE DISCHARGE BRAKING RESISTOR<br>1. If possible, do not stop the drive as often.<br>2. Increase the deceleration time [dEC] setting.<br>3. Increase the regenerative discharge resistance capacity. |

TABLE 16-1 (Continued on next page)

TABLE 16-1: (Continued)

| Display | Explanation and Possible Remedy |
|---|---|
| OH | INVERTER OVERHEATING TRIP<br>1. Check that the cooling fan is operating. (2 HP and larger)<br>2. Check that the ambient temperature is not too high. Remove the caution label on the top cover if the ambient temperature is too high.<br>3. Provide more space on sides of drive, and near the heat sinks. |
| E | EMERGENCY STOP<br>1. The automatic operation or remote operation has stopped the drive. |
| EOFF | CONFIRMATION OF EMERGENCY STOP<br>1. The automatic operation or remote operation has been stopped with the panel. Emergency stop will be activated when the [STOP RESET] key is pressed. To cancel, press any other key. |
| Err1 | FREQUENCY SETTING SIGNAL ABNORMALITY<br>1. The frequency setting signal point and point 2 are too close. Reset with a greater difference between point 1 and point 2. |
| Err2 | RAM ABNORMALITY<br>1. There is an error in the main unit microcomputer RAM. Repair is necessary. |
| Err3 | ROM ABNORMALITY<br>1. There is an error in the main unit microcomputer ROM. Repair is necessary. |
| EEP | EEPROM ABNORMALITY<br>1. Data error in the EEPROM. Repair is necessary. |
| C | STALL PREVENTION WARNING (See Note 1)<br>1. Lengthen the acceleration time [ACC] setting.<br>2. Increase/decrease the torque boost amount. |
| P | OVERVOLTAGE WARNING (See Note 1)<br>1. Lengthen the deceleration time [dEC] setting.<br>2. Install the optional regenerative discharge resistor or regenerative discharge unit.<br>3. If drive will not start, the input voltage is too high. Check to see that input voltage is less than 240 VAC. |

TABLE 16-1: (Continued on next page)

TABLE 16-1: (Continued)

| Display | Explanation and Possible Remedy |
|---|---|
| L | OVERLOAD WARNING (See Note 1)<br>1. The load may be too large for the drive.<br>2. Increase the inverter rating.<br>3. [ thr ] may be set too low. |
| HI<br>LO | SET VALUE ERROR WARNING (See Note 1)<br>1. There is a set value error during data read out and/or write in. The value entered exceeds the allowed range of this particular value. Check that there is no mistake in the setting value, and reset. (Error display and data are alternatively displayed twice.) |

Note 1: These are warning displays only and do not necessarily cause the drive to trip.

## 16.2 Other Errors and Remedies

Other common error displays and potential remedies are shown in the table below.

TABLE 16-2: OTHER COMMON ERRORS AND REMEDIES

| Error Symptoms | Possible Cause and Remedy |
|---|---|
| The motor rotates but the speed does not change. | 1. The load is too heavy. Decrease the load or increase the rating of the drive.<br>2. The soft-stall function is activated. Turn the soft-stall function OFF.<br>3. The upper limit frequency [ UL ] set value is too low. Increase the upper limit frequency value.<br>4. The frequency setting signal is too low. Check the signal value and circuit.<br>5. Check the setting characteristics of the frequency setting signal. |
| The motor rotation is backwards from desired direction. | 1. Reverse the wiring at output terminals U, V, and W. (any two wires.) |

TABLE 16-2: (Continued)

| Error Symptoms | Possible Cause and Remedy |
|---|---|
| Motor does not rotate. | 1. Incorrect wiring, open circuit, power failure at the input, output, or power line. Confirm that CHARGE lamp is on.<br>2. When operating from the touchpad confirm that the "PANEL CONTROL" LED is on.<br>Press the [PANEL/REMOTE] key as required.<br>3. Confirm that the operating frequency is set to desired frequency.<br>4. Confirm that terminal ST-CC is shorted. Short terminals if necessary.<br>5. Check to see if a trip has occurred, or if the auto-restart preparation is on. If tripped, remove cause and reset drive.<br>6. The load on the motor is too heavy. Decrease the load or increase the rating of the drive.<br>7. If P is displayed on the LED monitor the input voltage is too high. Reduce voltage to 240 VAC or less. |
| The motor acceleration or deceleration is not smooth. | 1. The setting for the acceleration time [ACC] and deceleration time [dEC] is too short.<br>Lengthen the acceleration time or the deceleration time. |
| The motor speed is too high or too low. | 1. The motor voltage specifications are not appropriate. Adjust the motor voltage to the specifications.<br>2. The motor terminal voltage is low. Check the output voltage decrease and output voltage adjustment set values. Increase the wire size if necessary.<br>3. The increased deceleration rate for the gear, etc. is not correct. Check the increased deceleration rate for the gear, etc.<br>4. The output frequency setting is not correct. Check the setting of the output frequency range.<br>5. Adjust the carrier frequency. |
| The motor "pulses" during operation. | 1. The load is too heavy or too light. Decrease the load variation. Make sure it matches the drive characteristics.<br>2. The inverter and motor rating values do not match. Make sure the load matches the drive characteristics. |

# Chapter 17 Maintenance and Inspection

Preventative Maintenance and Periodic Inspection:

Prepare and implement an effective preventative maintenance program so that the Toshiba Model VF-SX drive may provide years of safe, trouble-free operation.

Perform a periodic inspection once every three to six months, depending on the status and type of each application. Before performing the inspection be sure the drive has been disconnected from the line power, and that the "CHARGE" lamp is turned off.

SUGGESTED MAINTENANCE PROCEDURES:

1. Check all control and power terminals to see that none of the control wires are becoming loose at the control terminals. Tighten any loose connections with a screwdriver if necessary.

2. Check that the terminal pressure crimp devices at the terminals are properly aligned and not bent, deformed, or broken. Check that none of these devices show signs of being overheated, such as discoloration or warping.

3. Visually inspect all wiring and confirm that there is no problem with any of the insulation.

4. Clean all dirt and dust from the drive, especially the cooling vents. Use a vacuum cleaner. Take special care to carefully clean the printed circuit boards of any dirt or dust. Dust on the boards causes heat build-up and improper current paths.

5. If the drive has not been energized for several months or longer, it is recommended to pass current through the drive for a few hours, at a low level. If this is the case do not apply full commercial voltage onto the drive at once. Use a variable power supply and slowly raise the voltage to the normal line voltage.

6. When performing an insulation test, use only the main input circuit terminal block with 500 Volt megaohmmeter. Do NOT conduct a high pot test on any other portion of the drive, including the control terminals.

   NOTE: When performing a motor insulation test, disconnect the motor feeder cables from the load terminals so as to test only the motor windings, and not the drive output devices.

7. Pressure resistance test.
   If a pressure resistance test is carried out on the control panel, a pressure resistance defect may be detected due to leading currents from the barrister in the inverter. Thus, when carrying out the pressure resistance test, always remove the inverter first.

8. Measuring the input and output voltage with a test instrument during normal operating conditions can be effective for finding errors, or spotting a trend toward potential problems. The voltage measured at the output of the drive may give different values depending on the type of meter used.

   On the input, measure the voltage values between R-S, S-T, and R-T. At the output, measure the voltage values between U-V, V-W, and U-W.

RECOMMENDED VOLTMETER:
Input -- Moving magnet type.
Output -- Rectifying AC type

When possible, also measure the ambient temperature at the drive. Keep a record of all of this data. Significant changes imply that there may be a problem developing.

# Chapter 18 Storage and Warranty

## 18.1 Storage

Please observe the following constraints when the VF-SX drive is to be stored temporarily before being installed and placed into service.

1. Do not store the inverter in hot or humid areas. Do not store in dusty areas, or in places contaminated with metallic particles.
2. Do not remove the anti-static shielding bag from any portion of the drive while the drive is in storage. Always remove the bag before installation.
3. Store the drive with the desiccant inside the shipping box. Store the drive inside the shipping box.
4. For very long term storage, it is recommended to remove the drive once per year, and apply power to charge the electrolytic capacitor. Do not apply line power directly. Apply power from a variable voltage source, and ramp the voltage from 0 volts to approximately 200 volts over a period of several minutes. Once at full voltage let the capacitor charge for 5-8 hours. The electrolytic capacitor will become non-functional and have to be replaced before the drive can be placed in service if this procedure is not followed.

## 18.2 Warranty

Toshiba's standard warranty applies to this product. See below.

### TOSHIBA INTERNATIONAL CORPORATION

STANDARD TERMS AND CONDITIONS

ACCEPTANCE: IT IS EXPRESSLY UNDERSTOOD AND AGREED THAT ALL CUSTOMER'S ORDERS MUST INCLUDE ALL OF SELLERS TERMS AND CONDITIONS PRINTED HEREON. Unless otherwise expressly stated herein, this invoice supersedes all previous quotations and agreements relating to this transaction and shall expire thirty days after its date. This quotation shall not bind or be valid against Toshiba International Corporation ("Company") until an order based hereon is accepted in writing by an executive of the Company at its offices at Houston, Texas. All such orders shall be deemed to be accepted at the time and place such written acceptance is executed by the Company.

DELIVERY: Except as may be otherwise specified in this quotation, delivery will be f.o.b. point of shipment at the Company's warehouse, in Houston, Texas. Shipping dates are estimates which are not guaranteed and are based upon prompt receipt of all necessary information. The Company shall in no event be liable for delays caused by fire, act of God, strikes, labor difficulties, acts of governmental or military authorities, delay in transportation or in procuring materials or causes of any kind beyond the Company's control.

WARRANTY: The Company warrants that all products or parts described in this invoice and sold by it to the Purchaser or any other products or parts sold or furnished to the Purchaser will be free from defects in materials and workmanship. THIS WARRANTY SHALL EXPIRE EIGHTEEN (18) MONTHS FOLLOWING THE DATE OF SHIPMENT OF SUCH PRODUCTS OR PARTS TO THE PURCHASER OR TWELVE (12) MONTHS AFTER SUCH PARTS OR PRODUCTS ARE FIRST PLACED IN OPERATION, WHICHEVER PERIOD SHALL FIRST EXPIRE. The Company shall, at its option, repair or replace, f.o.b. its warehouse at 13131 West Little York Rd., Houston, Texas or f.o.b. a Company authorized Service Shop, any such product or part which is defective within the terms of the foregoing warranty, provided such products and parts have at all times been operated or used under the normal operating conditions for which they were designed. THE COMPANY HEREBY DISCLAIMS ALL OTHER EXPRESS OR IMPLIED WARRANTIES, INCLUDING WITHOUT LIMITATION ALL IMPLIED WARRANTIES OF MERCHANTABILITY PERTAINING TO SUCH PRODUCTS OR PARTS. THE FOREGOING OBLIGATION TO REPAIR OR REPLACE SUCH PRODUCTS OR PARTS SHALL BE THE SOLE AND EXCLUSIVE REMEDY OF THE PURCHASER, ITS CUSTOMERS, OR USERS OF THE PRODUCTS OR PARTS FOR THE BREACH OF THE WARRANTY SPECIFIED HEREIN. THE COMPANY SHALL HAVE NO OBLIGATION TO REPAIR OR REPLACE SUCH PRODUCTS OR PARTS UNLESS IT RECEIVES AT ITS OFFICES AT 13131 WEST LITTLE YORK RD., HOUSTON, TEXAS WRITTEN NOTICE OF SUCH DEFECT WITHIN THE ABOVE MENTIONED WARRANTY PERIOD.

LIABILITY: Except as specified in the foregoing paragraph entitled "WARRANTY", the Company shall have no obligation or liability whatsoever to the Purchaser, including, without limitation, any claims for consequential damages or labor costs, by reason of any breach of the express warranty described therein. The Purchaser further hereby agrees to indemnify and hold the Company harmless from and against all losses, damages, obligations, liabilities, suits and causes of action (other than the cost of replacing or repairing the defective product as specified in the foregoing paragraph entitled "WARRANTY") arising directly or indirectly from the acts, omissions, or negligence of the Purchaser in connection with or arising out of the testing, use, operation, replacement or repair of any product described in this quotation and sold or furnished by the Company to the Purchaser.

PRICES: Prices are those in effect at time of shipment. In the event of a published increase or reduction in prices by the Company, the new price will become effective immediately on the unshipped portion of the order at the time of the change. In no event, however, will a reduction in price be retroactive to shipments made prior to the date of the price change. Upon written acceptance by the Company, the Purchaser's order will not thereafter be subject to cancellation nor to deferment of deliveries without the Company's written consent.

TAXES: The Purchaser shall reimburse the Company for any sales, use, occupation, excise, or other tax arising out of sales of products to the Purchaser upon receipt of the Company's invoice for the amount of the tax or, at the option of the Company, the Purchaser shall provide the Seller with a tax exemption certificate acceptable to the appropriate taxing authorities.

TERMS OF PAYMENT: Unless otherwise agreed upon in writing terms of Payment are cash, in United States Dollars, in full, within thirty (30) days from date of shipment. All orders are subject to the approval of the Company's Credit Department and the Company may require full or partial payment in advance. Pro rata payments shall become due as shipments are made, except where shipments are delayed by the Purchaser for any reason, in which event payments shall become due from the date on which the Company is prepared to make shipment. If manufacture is delayed by the Purchaser, the Company may elect to require payment based on the contract price and percentage of completion. Any property held for Purchaser shall be at the risk and expense of the Purchaser.

SECURITY INTEREST: If requested by the Company, the Purchaser hereby agrees to grant to the Company a security interest in all products described in this quotation and sold by the Company to the Purchaser and all proceeds of the resale thereof by the Purchaser, including without limitation all accounts receivable, for the purpose of providing the Company with security for the payment of the purchase price of such products. Pursuant to such security interest the Company shall at all times have the rights of a secured party with regard to such products and proceeds under the Uniform Commercial Code, or any similar statute, as enacted in the state or states in which such products may at any time be located. The Purchaser hereby agrees to execute any and all security agreements, financing statements, and other documents which may be requested by the Company in order to create and perfect any of the foregoing security interests.

PATENT INFRINGEMENT AND OTHER LIABILITIES: If promptly notified and given an opportunity to do so with friendly assistance, the Company will defend the customer and the ultimate user of the equipment from any actual or alleged infringement of any published United States patent by the equipment or any part thereof furnished pursuant hereto (other than parts of special design, construction or manufacture specified by and originating with the Purchaser or ultimate user), and will pay all damages and costs awarded by a competent court in any suit thus defended or of which it shall have had prompt notice and an opportunity to defend as aforesaid.

NOTE: The exportation from the United States of the products, commodities or technical data sold, furnished or delivered to your firm by Toshiba International Corp. and the reexportation of such items from any other country may be prohibited or restricted under U.S. Federal Laws and Regulations. Accordingly, no exportation of such products, commodities or technical data from the United States and no reexportation thereof from any other country shall be permitted, except in accordance with U.S. Law.

Revised
10/89

# Appendix

## APPENDIX 1 -- TABLE OF TRIP CODES AND WARNING CODES

| Display | Trip Code Contents |
|---|---|
| nErr | No Error (Only Appears in Past Error Displays) |
| OC1 | Overcurrent Trip (OC) During Acceleration |
| OC2 | Overcurrent Trip (OC) During Deceleration |
| OC3 | Overcurrent Trip (OC) During Normal Operation |
| OCL | Overcurrent Trip on Load Side at Start-up (Check Output Terminals) |
| OCA | Overcurrent Trip on Alarm at Start-up (Check Output Device - GTR's) |
| OP | Overvoltage Trip in DC Circuit (OP) |
| OP2 | (Overvoltage Trip in DC Circuit During Deceleration (OP) |
| OH | Inverter Overheating Trip (OH) |
| OL | Motor Overload Trip (OL) |
| E | Emergency Stop |
| EEP | EEPROM Abnormality (Adjustment or Other Data) |
| Err2 | RAM Abnormality |
| Err3 | ROM Abnormality |
| OLr | Overload Trip in Discharge Resistor for Regenerative Discharge Braking |

| Display | Warning Code Contents (Does NOT Trip Drive) |
|---|---|
| POFF | Undervoltage Display |
| rtry | Display During Retry |
| Err1 | External Frequency Setting Error |
| CLr | Indication of Clear |
| EOFF | Indication of Emergency Stop |
| CtrL | Indication of Control for Coasting Stop |
| HI | Set Value has Reached Upper Limit, and Cannot be Set Higher |
| LO | Set Value has Reached Lower Limit, and Cannot be Set Lower |

## APPENDIX 2 -- INPUT TERMINAL INFORMATION AND OUTPUT TERMINAL INFORMATION

**Input Terminal Information:**

The eight input terminal correspond to the following bits on the LED display.

Upper half is lit when ON.

Lower half is lit when OFF.

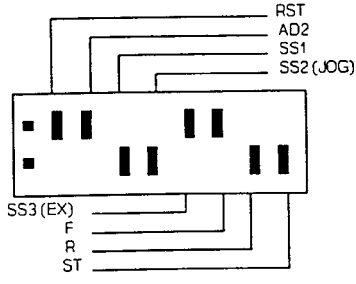


**Output Terminal Information:**

The two output terminals correspond to the following bits on the LED display.

Upper half is lit when ON.

Lower half is lit when OFF.

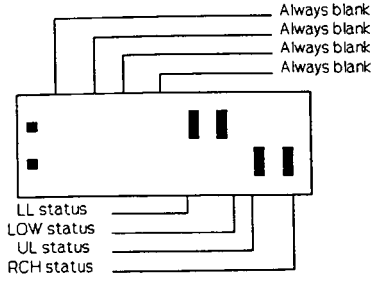

## APPENDIX 3 -- LED ALPHANUMERIC CROSS REFERENCE

Character Code for Numbers:

| 0 | 1 | 2 | 3 | 4 | 5 | 6 | 7 | 8 | 9 | - |
|---|---|---|---|---|---|---|---|---|---|---|
| 0 | 1 | 2 | 3 | 4 | 5 | 6 | 7 | 8 | 9 | - |

Character Codes for the Alphabet:

| A a | B b | C c | D d | E e | F f | G g | H h | I i |
|---|---|---|---|---|---|---|---|---|
| A | b | C | d | E | F | G | H h | I |

| J j | K k | L l | M m | N n | O o | P p | Q q | R r |
|---|---|---|---|---|---|---|---|---|
| J | | L | n | n | O o | P | | r |

| S s | T t | U u | V v | W w | X x | Y y | Z z |
|---|---|---|---|---|---|---|---|
| S | t | U | u | | | y | |